Gunster

City of Doral
PZAD-2511-0983
Modification to DRI
Development Order

REVISED
9:27 am, Mar 27, 2026

James R. Williams, Jr.
Shareholder
(305) 376-6008
jameswilliams@gunster.com

March 24, 2026

Via Electronic Submission

Mr. Alexander Magrisso
Planning & Zoning Director
8401 NW 53 Terrace, 2nd Floor
Doral, Florida 33166

Re: Amended and Restated Letter of Intent / Modification to a Development of Regional Impact (DRI) Development Order to Permit Residential Development within Miami International Mall / Greystar Development East, LLC / Property Generally Located at 1625 NW 107 Avenue and 1603 NW 107 Avenue (Folio Numbers 35-3032-008-0050, 35-3032-008-0140, and portion of 35-3032-008-0010)

Dear Mr. Magrisso,

Please accept this Amended and Restated Letter of Intent submitted on behalf of Greystar Development East, LLC (the **"Applicant"**) in support of its request to modify the Miami International Mall Consolidated Development of Regional Impact Development Order (the **"Miami International Mall Consolidated DRI"**). The requested modification would allow residential development within Miami International Mall (the **"Application"**) on certain parcels totaling approximately 25.612 acres, identified by Miami-Dade County Tax Folio Numbers 35-3032-008-0050, 35-3032-008-0140, and a portion of 35-3032-008-0010 (collectively, the **"Property"**). The Applicant seeks approval of this modification as it pertains solely to the Property. Enclosed for review and approval is a proposed Master Development Agreement. For reference, an aerial exhibit depicting the general boundaries of the Property, outlined in green, is included below.

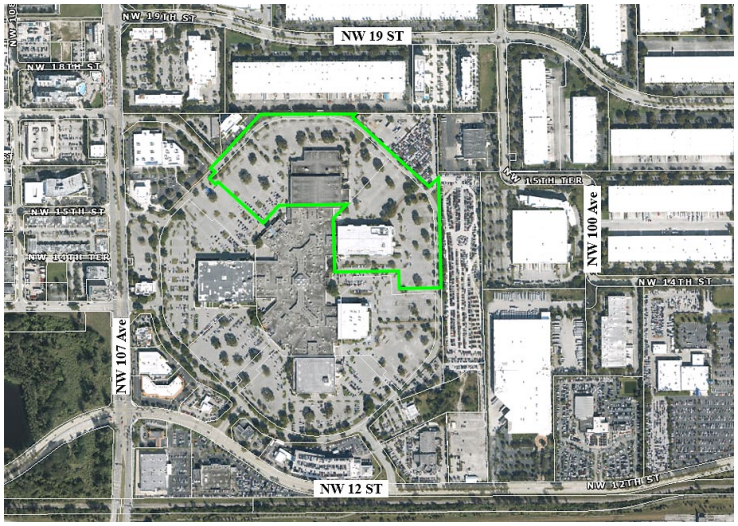

As of the date of this letter, the Applicant also filed the following nine (9) concurrent application requests:

1. A Comprehensive Plan Text Amendment to create the "Mall Mixed Use" designation to permit residential development as applied to the proposed "Mall Mixed Use" Zoning District.

2. A Future Land Use Map Amendment to redesignate the Property from "Business" to "Mall Mixed Use."

3. A Land Development Code Amendment to create the Mall Mixed Use District.

4. A Zoning Map Amendment to rezone the Property into the "Mall Mixed Use" zoning district.

5. Site Plan Approval application to allow the development a multifamily residential project on the west ±7.327 acres (319,162 square feet) of that certain parcel of land located at 1625 NW 107 Avenue and identified by Miami-Dade County Tax Folio Number 30-3032-008-0050 (**"Residential Site No. 1"** or **"Site 1"**).

6. Site Plan Approval application to allow the development a multifamily residential project on the east ±5.66 acres (246,788 square feet) of that certain parcel of land located at 1625 NW 107 Avenue and identified by Miami-Dade County Tax Folio Number 30-3032-008-0050 (**"Residential Site No. 2"** or **"Site 2"**).

7. The Administrative Release of a Declaration of Use recorded in Official Records Book 17735, Page 3022, which restricted the use of a portion of the Property to a limited automobile service center.

8. A Partial Release of the Declaration of Restrictions recorded in Official Records Book 10619, Page 1984 of the Public Records of Miami-Dade County, Florida.

9. A Modification of the Declaration of Restrictive Covenants recorded in Official Records Book 11212, Page 1613 of the Public Records of Miami-Dade County, Florida.

Miami International Mall Consolidated DRI History. On December 3, 1979, the Miami-Dade County Board of County Commissioners, pursuant to Resolution Nos. Z-263A-79, approved the original "Miami International Mall DRI" for the development of a regional shopping center. Resolution No. Z-263-79, which was approved on the same day, approved the rezoning of the peripheral tracts to the mall and contained a covenant, that among other things, provided for the dedication of a park and ride facility and a Miami-Dade Public Library branch site. The Miami International Mall DRI was subsequently amended and bifurcated to create the "Miami International Mall Peripheral DRI" by Miami-Dade County (the "County"). In 2005, the development orders for the Miami International Mall DRI and the Miami International Mall

Peripheral DRI were ultimately consolidated by the City of Doral (the "City") and referred to as the "Miami International Mall Consolidated DRI." For your convenience, below is a brief historical overview of the major events that the DRI, now known as the "Miami International Mall Consolidated DRI," underwent:

- **May 6, 1982**
  Resolution No. Z-92-82 (the "**1982 Resolution**"), passed and adopted by the Miami-Dade County Board of County Commissioners, approved an amended development order for the peripheral portion of the Miami International Mall DRI. The 1982 Resolution pertained to the six (6) tracts of land surrounding Miami International Mall, consisting of approximately 33.6 acres of land located between NW 97th Avenue and NW 107th Avenue in Section 32, Township 53 South, Range 40 East within Miami-Dade County. The development program consisted of a 350-room hotel and approximately 315,000 square feet of retail/commercial uses.

- **January 20, 1983**
  Resolution No. Z-3-83 (the "**1983 Resolution**"), passed and adopted by the Miami-Dade County Board of County Commissioners, approved a modification to the Miami International Mall Peripheral DRI to increase the hotel room count from 350, previously approved by the 1982 Resolution, to 500 (i.e., an increase of 150 hotel rooms).

- **June 19, 1986**
  Resolution No. Z-157-86 (the "**1986 Resolution**"), passed and adopted by the Miami-Dade County Board of County Commissioners, approved a modification to the Miami International Mall Peripheral DRI development order, as amended by the 1983 Resolution, to modify the development program to allow for the development of Tract B with a maximum of 500 hotel rooms, or a maximum of 49,000 square feet of gross retail floor area, or a combination of hotel and retail uses, providing that 1 hotel room is the equivalent of 240 square feet of gross retail floor area, and allowing the substitution of 240 square feet of gross retail floor area for each unbuilt hotel room up <u>to a maximum of 204 unbuilt hotel rooms</u>. The State of Florida resolved that the requested modifications did not constitute a substantial deviation requiring further development of regional impact review pursuant to Florida Statute Section 380.06(19).

- **March 5, 1987**
  Resolution No. Z-62-87 (the "**1987 Resolution**"), passed and adopted by the Miami-Dade County Board of County Commissioners, approved a modification to the DRI development order, as amended by the 1983 Resolution, and then again by the 1986 Resolution, to modify the development program to the Miami International Mall Peripheral DRI to allow for the development of Tract B with a maximum of 500 hotel rooms or a maximum of 120,000 square feet of gross retail floor area, or a combination of hotel and retail uses, providing that 1 hotel room is the equivalent of 240 square feet of gross retail floor area, and allowing the substitution of 240 square feet of gross retail floor area for each unbuilt hotel room <u>up to a maximum of 500 unbuilt hotel rooms</u>. The State of Florida resolved that

the requested modifications did not constitute a substantial deviation requiring further development of regional impact review pursuant to Florida Statute Section 380.06(19).

- **June 30, 2005**
  Resolution No. Z05-31 (the "**2005 Resolution**"), passed and adopted by the City of Doral City Council, approved the consolidation of the Miami International Mall DRI and the Miami International Mall Peripheral DRI into a single development order to be known as the Miami International Mall Consolidated DRI. It also approved a rezoning request from IU-1 and IU-C to BU-2 on a portion of the Mall and a Notice of Proposed Change. The State of Florida resolved that the requested modifications did not constitute a substantial deviation requiring further development of regional impact review pursuant to Florida Statute Section 380.06(19).

- **June 27, 2012**
  Resolution No. 12-91 (the "**2012 Resolution**"), passed and adopted by the City of Doral City Council, approved modification of Condition No. 16 of the Miami International Mall Consolidated DRI Development Order last amended by the 2005 Resolution, to permit the previously approved hotel to be built anywhere within the Miami International Mall Consolidated DRI, rather than only on Tract B. The State of Florida resolved that the requested modifications do not constitute a substantial deviation requiring further development of regional impact review pursuant to Florida Statute Section 380.06(19).

Based on the prior approvals, and according to the last annual report submitted for the Project, the Miami International Mall Consolidated DRI is currently approved to be developed with a maximum of 1,607,721 square feet of retail use with the option to build up to 500 hotel rooms in exchange for a concurrent reduction in retail use where one hotel room equals 240 square feet of retail use.

Changes to DRI Process Since 2012 Resolution. In 2018, the Florida Legislature enacted HB 1151 (Ch. 2018-158, Laws of Florida), which fundamentally restructured the Development of Regional Impact (DRI) review process under Florida Statute Section 380.06. This legislation effectively ended state and regional oversight of DRI amendments and shifted full administrative authority to local governments. Prior to this change, significant modifications to approved DRIs — including determinations of "substantial deviation" or aggregation of related developments — triggered review by the Florida Department of Economic Opportunity (DEO) and regional planning councils. The 2018 amendments repealed those requirements, eliminating the need for state or regional review and appeals to the Florida Land and Water Adjudicatory Commission, except in limited abandonment cases.

As amended, Florida Statute Section 380.06 now provides that local governments have the sole authority to approve, deny, or amend existing DRI development orders in accordance with its comprehensive plan and land development regulations. The statute also deleted the "substantial deviation" thresholds that once required state-level re-evaluation of project impacts and removed the aggregation rules that combined multiple projects into a single DRI for review. In practical effect, these reforms decentralized the DRI framework—vesting review, amendment, and

enforcement responsibilities entirely in local governments—thereby aligning all DRI administration with local land-use control while preserving vested rights under existing development orders. As a result, and unlike previously done in 2012, this request to modify the Miami International Mall Consolidated DRI is subject to the City's review and approval and does not require the Applicant to file a Notification of a Proposed Change.

Modification of the Miami International Mall Consolidated DRI. The Applicant is seeking to modify the Miami International Mall Consolidated DRI to permit a maximum of 896 residential units on the Property, equating to thirty-five (35) units per gross acre by utilizing the design excellence bonuses available under the proposed "Mall Mixed Use" zoning district.[1] In addition, the Applicant, via the DRI seeks to allocate the 896 residential dwelling units across specific portions of the Property to facilitate orderly future development while maintaining compliance with applicable density limitations. To accomplish this, the Applicant proposes to include the following additional condition to the Miami International Mall Consolidated DRI, approved pursuant to Resolution No. Z05-31, last amended by Resolution No. 12-91:

> *Notwithstanding anything to contrary, based on a maximum permitted density of thirty-five (35) units per gross acre (utilizing the density bonus permitted in the "Mall Mixed Use" zoning district), a maximum of 896 residential dwelling units may be permitted to be developed within the 25.612 acres at the north side of the Miami International Mall Consolidated DRI (the "Residential Development Area") as more specifically described in that certain Boundary Survey prepared by J. Hernandez & Associates Inc. Land Surveyors and Mappers, with a last revision date of November 6, 2025, consisting of eleven (13) sheets, and attached hereby as* ***Exhibit "D".***

Proposed Project. The approval of this Application will permit the Property to be developed with three (3) standalone but cohesive multifamily residential projects (collectively, the "Project"). For general reference purposes, please find a preliminary and conceptual site plan for the Property attached as **Exhibit "A".** The Project will allow for the introduction of new residential units across multiple multifamily buildings, complementing and supporting the existing commercial uses within Miami International Mall (the "Mall"). This approach will also allow for the reactivation of underutilized portions of the Mall – specifically the former Sears and JCPenney sites – while maintaining and enhancing ongoing retail operations. The Project aligns with the City's goals of promoting balanced, sustainable growth, diversifying housing options, and enhancing the overall vitality of the City's commercial corridors. The Mall itself has already begun a process of reinvention that reflects the evolution of consumer preferences toward experience-driven destinations.

A major new entertainment anchor, Elev8 Fun, is set to open in the former Kohl's building, bringing approximately 110,000 square feet of indoor entertainment including electric go-karting,

[1] Assuming the approval of the concurrent and proposed text change of the "Mall Mixed Use" district and utilizing the proposed density bonus to permit thirty-five (35) units per gross acre.

bowling, arcade gaming, mini-golf, laser tag, and a full-service restaurant. This addition represents a significant private investment aimed at reactivating foot traffic, extending visitor dwell time, and attracting a broader demographic to the Mall. The Mall's ownership has continued to curate new and dynamic tenants, such as specialty restaurants, experiential retail, and family-oriented entertainment concepts, that collectively strengthen the Mall's position as an active community hub rather than a traditional retail-only destination. The addition of a residential component will further enhance these efforts by increasing foot traffic and providing a base of customers within close walking distance of the Mall's existing commercial uses.

By integrating residential development into this evolving environment, the Project will help sustain and amplify the Mall's revitalization efforts. A built-in residential population of a little under 900 new households will provide consistent, year-round patronage to the Mall's new and existing tenants, supporting day and evening activity that enhances safety, visibility, and economic stability while generating the supportive uses needed to attract additional tenants. The residents of the proposed development will not only reinforce the success of experiential anchors like Elev8 Fun but also help attract additional tenants seeking vibrant, mixed-use environments. This symbiotic relationship between new housing and revitalized retail ensures that Miami International Mall remains competitive and relevant within a changing regional retail landscape.

Recent mall redevelopments across South Florida demonstrate that introducing residential components into legacy retail centers provides measurable community benefits. In South Miami, the approved transformation of The Shops at Sunset Place will deliver 1,513 new residential units along with modernized retail and public spaces. That redevelopment converts an underperforming shopping center into a walkable, resident-driven district that supports local businesses, enhances transit ridership, generates new property tax revenue and increases employment opportunities—all while helping address the City of South Miami and the broader region's housing demand. Similarly, in Cutler Bay, the Southplace City Center redevelopment of the former Southland Mall will introduce over 5,000 residential units supported by complementary retail and civic spaces. The first phase, The Current at City Center—now under construction—includes 350 units and has already demonstrated strong market absorption. Collectively, these projects show that residential-led redevelopment of aging malls is a proven tool for reinvigorating declining commercial sites and providing housing in established urbanized areas.

Applying these lessons from around the County to the City, the proposed residential redevelopment of the Mall represents a strategic opportunity to strengthen one of the City's most recognizable landmarks and adapt it to the evolving community needs. The City has experienced a population increase exceeding sixty-five percent (65%) in the last approximate decade, alongside sustained employment growth and rising housing demands. Adding 896 multifamily residential units in this location will introduce a permanent residential base that supports surrounding retail, hospitality, and service industries while improving walkability, and contributing to the City's long-term fiscal stability.

In keeping with the City's vision for sustainable and balanced development, this residential-focused redevelopment of Miami International Mall will transform an underutilized property and into a vibrant, livable community core. It will help ensure the long-term economic

viability of the site, create a meaningful addition to the City's housing supply, and serve as a model for adaptive reuse that aligns with regional and national best practices. The Applicant looks forward to collaborating with City staff and stakeholders to advance a redevelopment plan that enhances the City's livability, economic resilience, and urban character.

Consistency with the Comprehensive Plan. The Application maintains internal consistency within the Comprehensive Plan and advances its adopted goals, objectives, and policies. Specifically, the Project furthers the following Comprehensive Plan policies:

> ***Policy 1.1.3****: Where appropriate, place higher densities in close proximity to transit stops. By January 2018, complete a study with recommended actions of land use and zoning densities near transit access points in Doral measuring them against a minimum transit viability density standard of 7 units per acre.*

The Project directly advances the City's mobility and sustainability objectives by locating new residential density within walking distance of existing transit service. By introducing a meaningful number of residential units at this location, the Project helps support the City's goal of achieving transit-supportive densities that meet or exceed the minimum viability threshold of 7 units per acre. This strategic infill pattern not only reduces reliance on single-occupancy vehicles but also strengthens ridership potential for future transit expansions envisioned in the Comprehensive Plan. The Project therefore aligns with Policy 1.1.3 by reinforcing Doral's emerging multimodal urban fabric and placing households exactly where transit can serve them most efficiently.

> ***Policy 1.1.4****: Search for evolving opportunities in the Future Land Use Element (FLUE) and LDC for additional cluster residential development and energy-efficient, multi-story homes on smaller lots.*

The Project transforms an underutilized commercial property into a more sustainable and efficient land use consistent with the City's long-term planning directives. By incorporating multi-story residential buildings with modern, energy-efficient systems, the Project demonstrates the type of forward-looking housing model envisioned by this policy. The site's compact development structure allows for a more thoughtful use of land, enabling additional green space and reduced impervious surface. This redevelopment represents exactly the kind of opportunity the Comprehensive Plan encourages—leveraging infill sites to deliver high-quality, energy-efficient housing in a clustered, space-efficient configuration.

> ***Policy 1.4.4****: Look for opportunities to preserve and expand open green space in the City. Revisit current standards for open space, parking, and local roadway dimensions with an eye toward reducing impervious area. Incentives for multi-story, cluster housing and structured parking should also be explored. Also, consider reducing*

> *parking space requirements for private developments within ½ mile of a transit stop.*

The Project addresses the City's environmental and urban design objectives by replacing predominantly paved, low-yield commercial land with a thoughtfully planned residential development that integrates meaningful open green space. By utilizing multi-story residential forms and exploring reduced parking needs due to proximity to transit, the Project significantly decreases the site's impervious footprint. This development approach directly supports Policy 1.4.4 by demonstrating how higher-density, vertical development can increase on-site green areas while promoting a more walkable, transit-supportive environment. The Project exemplifies the City's vision of using redevelopment as a tool to restore green space and reduce heat-island effects.

> ***Policy 2.1.13****: Discourage land use patterns indicative of urban sprawl in the Future Land Use Map and any amendment applications by dictating compact development, mixed-use where appropriate, and efficient use of public facility capacity and resources, while protecting single- family neighborhoods.*

By shifting an exclusively commercial parcel toward a mixed-use, compact residential pattern, the Project directly counters sprawl-related land consumption and advances the City's goal of promoting more efficient use of existing urban areas. The site is already serviced by infrastructure and proximate to employment, schools, and transit routes. Introducing residential uses here aligns with Policy 2.1.13 by strengthening the City's internal land use balance, reducing commute distances, and promoting infill rather than outward expansion. This redevelopment approach supports the City's long-term strategy of cultivating walkable, mixed-use districts that optimize land resources and decrease development pressure on peripheral areas.

> ***Policy 4.1.1****: Through the City's adopted Future Land Use Map and land use designations, promote a mix of residential land use categories and densities throughout the City.*

The Project contributes directly to the City's objective of diversifying residential opportunities by introducing a mixed-use land use category in an area currently restricted to commercial activity. This broadens the variety of housing types available to residents while enhancing the balance between residential and employment uses within the community. The Project's proposed density and housing typology complement the surrounding urban context and advance the City's intent to distribute residential uses more strategically across Doral's urban landscape. In doing so, the Project supports a healthier, more sustainable mix of land uses citywide.

> ***Policy 4.1.8****: Increase the City's residential potential within designated areas such as the DMU and CMU land use categories to promote mixed use development.*

The Project reinforces the City's mixed-use planning framework by increasing residential capacity within a designated mixed-use area (i.e., the proposed MMU). Consistent with Policy

4.1.8, the application strengthens the vitality of the area by adding housing that will support nearby commercial, civic, and neighborhood-serving uses. By incorporating residential development into an area already conceptually structured for mixed use, the Project activates the district with a built-in resident base, creating a more complete, self-sustaining neighborhood ecosystem. This directly fulfills the Comprehensive Plan's goal of leveraging mixed-use districts to expand housing opportunities while enhancing walkability and reducing transportation impacts.

Based on the foregoing, we respectfully request your favorable review and recommendation. Thank you in advance for your considerate attention to this application. Should you have any questions or require any additional information, please do not hesitate to contact me at (305) 376-6008.

Respectfully submitted,

GUNSTER

James R. Williams Jr., Esq.

Enclosure

CC: Catherine M. Carbonell, Esq.
Alberto J. Torres, MBA, MM

8401 NW 53RD Terrace, Second Floor, Doral, Florida 33166 Tel. (305) 593-6630 Facsimile: (305) 593-6768 Website: cityofdoral.com

PUBLIC HEARING/ ADMINISTRATIVE REVIEW APPLICATION

PLANNING AND ZONING DEPARTMENT

Please check one:

X CITY COUNCIL
☐ ADMINISTRATIVE REVIEW

OFFICIAL USE ONLY
Application No.: pzad-2511-0983
Date Received:

REVISED
9:27 am, Mar 27, 2026

INSTRUCTIONS

This application, with all supplemental data and information, must be completed in accordance with the specific instructions in this application. Applications and all supplemental information must be filed no later than 60 days prior to the regular public hearing date.

APPLICATION

Please indicate which type of application you are submitting by checking one category below:

☐	Change in Zoning District	☐	Plat
☐	Variance	☐	Entry Feature
☐	Appeal of Decision	☐	Site Plan
☐	Conditional Use	X	Other Modification of Development Order

IMPORTANT: THE APPLICANT, OR REPRESENTATIVE, MUST BE PRESENT AT THE HEARING TO PRESENT THE PROPOSAL.

Please print or type

Name of Applicant, agent or tenant (with owner's affidavit)		
James R. Williams Jr., Esq. on behalf of Greystar Development East, LLC		
Mailing Address c/o James R. Williams Jr., Esq. Gunster, Yoakley, & Stewart, P.A. 600 Brickell Avenue, Suite 3500	City, State, Zip Miami, Florida 33131	Telephone 305-376-6008 Fax Email: c/o jameswilliams@gunster.com ccarbonell@gunster.com
Name of Owner Please see Exhibit A		
Mailing Address	City, State, Zip	Telephone Fax Email:

PROPERTY INFORMATION

A. LEGAL DESCRIPTION. (If subdivided – lot, block, complete name of subdivision, plat book and page numbers). If metes and bounds description – Complete description, including section, township and range).

Folio Number(s) 35-3032-008-0010, -0131, -0130, -0111, -0110, -0120, -0121, -0115, -0125, -0090, -0100, -0021, -0022, -0020, -0015 (portion), -0050. -0140. -0080, -0070. -0041, -0060, 35-3032-044-0010

Address Reference Address: 1625 NW 107 Avenue

Lot(s) _____ Block _____ Section _____ Plat Book No. 117 Page No. 84

FINISHED FLOOR ELEVATION (If applicable): _____ FLOOD ZONE: _____

B. ADDRESS (If number has been assigned)_____

C. SIZE OF PROPERTY _____ft. X _____ ft. = _____ sq. ft.; +/-126.6 acre(s)
Width Depth

D. Provide legal description or address of any property held by the owner which is contiguous to that which is the subject matter of this application.

N.A

E. DATE SUBJECT PROPERTY WAS ACQUIRED Please see Exhibit A

APPLICANT'S REQUEST:

Specify in full the request. (Use a separate sheet of paper if necessary.)

Modification of the Development of Regional Impact Development Order.

LETTER OF INTENT

Explain purpose of application, benefit(s) in the change and reasons why this application should be approved. Specify the exact nature of the use or operation applied for, together with any pertinent technical data, which will clarify the proposal. (Use a separate sheet of paper if necessary.)

Please see the letter of intent included as part of this application.

Is this application the result of a Notice of Violation or deviation from approved plans? Yes No

Are there any existing structures on the property? Yes No

If so, what type? (CBS, Frame, Frame-Stucco, Wood, Other) CBS

Any applications that involve an existing building must provide copy of the approved plans, plat, site plan approval or any prior zoning history. Plans that are not filed with this application will not be considered by the City of Doral.

All data and exhibits submitted in connection with this application become a PERMANENT PART OF THE PUBLIC RECORDS OF THE CITY OF DORAL.

The following enclosures where applicable MUST BE ATTACHED to complete the application:

A. ☐ SURVEY OF PROPERTY: For vacant or improved property. Must be no more than one year old and sealed by a registered land surveyor. The Building and Planning Department may require a more recent survey if a site visit indicates any discrepancies. Survey must include, where applicable, lot lines, all structures, walls, fences, landscaping, and all physical improvements. All existing trees must be shown.

B. ☐ SITE DEVELOPMENT PLAN: Where applicable, plans shall show location and elevations of existing and proposed buildings, proposed additions, alterations and use of each; all dimensions of buildings and space between buildings; setbacks from property lines; proposed and existing off-street parking showing lined spaces, driveways, handicap spaces, compact spaces; a landscape plan that complies with the City of Doral Landscape Ordinance showing location of existing and proposed vegetation, landscaping (i.e. trees and hedges), number, height and species type. The plan shall also show wall and fence height, location and material. Prior ASPR or Site Plan Approval Resolution and plans must be submitted.

C. ☐ LETTER OF INTENT: A letter of intent must be filed explaining in detail the history of the property, prior approvals and the extent of the proposed project. Show how code criterion is met. Signature and address must be shown.

D. ☐ OTHER GOVERNMENTS/AGENCIES ENDORSEMENTS: All applicable DERM, Miami-Dade Fire Department, or the Miami-Dade Water and Sewer Department's endorsement must be submitted.

E. ☐ OWNER'S AFFIDAVIT: Owner's affidavit allowing the filing of an application is required on all applications where the applicant is not the owner of the property under consideration; same form allows posting of property.

F. ☐ TRAFFIC STUDY: A detailed traffic analysis considering the impacts of the proposed development on current level-of-service (LOS) standards in abutting (or nearby) roads and intersections.

NOTE: SURVEYS, SITE DEVELOPMENT PLANS, LANDSCAPE PLANS MUST BE SUBMITTED AT STANDARD PLAN SIZE. AN APPLICATION WILL NOT BE CONSIDERED COMPLETE UNLESS THE APPLICATION AND SUPPORTING DOCUMENTATION (FRONT AND BACK), APPROPRIATE PLAN DRAWINGS AND SURVEYS ARE SUBMITTED.

In support of this request, I submit the following additional items, which are attached hereto and made a part of this application:

☐ 35 MM Photo(s) (Mounted 8 ½ x 11) ☐ Other _____

☐ Letters from Area Residents

Please check only one of the following options:

☐ FOR CITY COUNCIL PURPOSES

I/We understand that additional public hearings may be required and any interested person may discuss the application with City staff to the same extent as the applicant. The application may change during the hearing process and additional public notices may affect the schedule of the hearings. If my/our appeal is denied, I/we must file an appeal to the Circuit Court within 30 days of the meeting.

10/7/2025
Date

Lewis Stoneburner, Vice President of Greystar Development East, LLC

8401 NW 53rd TERRACE, SECOND FLOOR, DORAL, FLORIDA 33166 • (305) 59DORAL (593-6725) • FAX (305) 593-6768• WEBSITE cityofdoral.com

I/We EWE RETAIL II LTD, a Florida limited partnership as Owner (s) of Lot (s) a portion of Tract A

Block _____ Section _____ PB/PG 117/84

of property which is located at 1625 NW 107 Avenue, Miami, Florida
desire to file an application for review before the City, I/We do understand and agree as follows:

1. That the application for public hearing will not be heard unless the applicant is present at the hearing.
2. The property will be posted with a sign, which must not be removed until after the public hearing, at which time the City staff will remove the sign. The applicant will be responsible for advertising the application and sending the mail out per the notification requirements of the City Code.
3. That the requirements of the Municipal Code, Miami-Dade County Ordinances, the Florida Building Code (FBC), and other government agencies may affect the scheduling and ability to obtain/ issue a permit for the proposal.
4. That the only exceptions to the City's Land Development Code (LDC) are those that have been specified in the written application (via variance application) and any other code or plan issues will be corrected by modifying the plans to comply with the respective codes and ordinances of the City of Doral or Miami-Dade County ordinances.
5. That the applicant will be responsible for complying with all the conditions and restrictions imposed by the City Council or City Staff in connection with the request and will take the necessary steps to make the request effective if approved by the City Council or City Staff.
6. That it is the responsibility of the applicant to submit a complete application with all of the documents necessary for the City Council or City Staff to consider the applicant's request.
7. That the applicant is responsible for timely submission and accuracy of all items requested on the application. Any information submitted less than 45 days prior to a public hearing will result in being postponed to the next available hearing date. Legislative items must have all requested items submitted 30 days prior to hearing.
8. That the applicant is responsible for any additional fees which include but are not limited to mailing notices to surrounding property owners, advertising, outside consultant reviews, legal fees, surveys, and technical reports.

I/We as the owners of the subject property (check one):

X do hereby authorize James Williams Jr., Esq. and Gunster, Yoakley, Stewart, P.A. on behalf of Greystar Development East, LLC as the applicant to act on my/our behalf as the applicant.

will on my/our own behalf act as applicant(s), and make application in connection with this request for a public hearing administrative review before the City Council or City Staff.

Owner's Name EWE RETAIL II LTD, a Florida limited partnership Signature X _____ Date 10-15-25
Name Edward J. Easton Title Manager

Notary to Owner: The foregoing instrument was acknowledged before me by means of [✓] physical presence or [ ] online notarization this 15 day of OCT., 2025 by Edward J. Easton as Mgr. for EWE RETAIL II LTD, who is ✓ personally known to me or ___ provided identification: _____

(NOTARY SEAL) LENETTE TRIVETT Notary Public - State of Florida Commission # HH 167678 My Comm. Expires Nov 29, 2025 Bonded through National Notary Assn.

Signature of Notary: _____
Name of Notary: Lenette Trivett

Applicant's Name Greystar Development East, LLC a Delaware limited liability company Signature _____ Date 10/7/2025
Lewis Stoneburner, Vice President

Notary to Applicant: The foregoing instrument was acknowledged before me by means of [✓] physical presence or [ ] online notarization this 7th day of October, 2025 by Lewis Stoneburner as Vice President for Greystar Development East, LLC, who is X personally known to me or ___ provided identification: _____.

(NOTARY SEAL) CHRISTIE L KIELTY MY COMMISSION # HH 189330 EXPIRES: November 12, 2025 Bonded Thru Notary Public Underwriters

Signature of Notary: _____
Name of Notary: Christie Kielty

PUBLIC HEARING ADMINISTRATIVE REVIEW APPLICATION — OWNER AFFIDAVIT

I/We JCP INTERNATIONAL I LLC, a Florida limited liability company as Owner (s) of Lot (s) a portion of Tract A

Block _____ Section _____ PB/PG 117/84

of property which is located at 1603 NW 107 Avenue, Miami, Florida
desire to file an application for review before the City, I/We do understand and agree as follows:

1. That the application for public hearing will not be heard unless the applicant is present at the hearing.
2. The property will be posted with a sign, which must not be removed until after the public hearing, at which time the City staff will remove the sign. The applicant will be responsible for advertising the application and sending the mail out per the notification requirements of the City Code.
3. That the requirements of the Municipal Code, Miami-Dade County Ordinances, the Florida Building Code (FBC), and other government agencies may affect the scheduling and ability to obtain/ issue a permit for the proposal.
4. That the only exceptions to the City's Land Development Code (LDC) are those that have been specified in the written application (via variance application) and any other code or plan issues will be corrected by modifying the plans to comply with the respective codes and ordinances of the City of Doral or Miami-Dade County ordinances.
5. That the applicant will be responsible for complying with all the conditions and restrictions imposed by the City Council or City Staff in connection with the request and will take the necessary steps to make the request effective if approved by the City Council or City Staff.
6. That it is the responsibility of the applicant to submit a complete application with all of the documents necessary for the City Council or City Staff to consider the applicant's request.
7. That the applicant is responsible for timely submission and accuracy of all items requested on the application. Any information submitted less than 45 days prior to a public hearing will result in being postponed to the next available hearing date. Legislative items must have all requested items submitted 30 days prior to hearing.
8. That the applicant is responsible for any additional fees which include but are not limited to mailing notices to surrounding property owners, advertising, outside consultant reviews, legal fees, surveys, and technical reports.

I/We as the owners of the subject property (check one):

X do hereby authorize James Williams Jr., Esq. and Gunster, Yoakley, Stewart, P.A. on behalf of Greystar Development East, LLC as the applicant to act on my/our behalf as the applicant.

will on my/our own behalf act as applicant(s), and make application in connection with this request for a public hearing administrative review before the City Council or City Staff.

Owner's Name JCP INTERNATIONAL I LLC, a Florida liability company Signature X _____ Date 10-15-25
Name Edward J. Easton Title Manager

Notary to Owner: The foregoing instrument was acknowledged before me by means of [✓] physical presence or [ ] online notarization this 15 day of OCT., 2025 by Edward J. Easton as Mgr for JCP INTERNATIONAL I LLC, who is ✓ personally known to me or ___ provided identification: _____

(NOTARY SEAL) LENETTE TRIVETT Notary Public - State of Florida Commission # HH 167678 My Comm. Expires Nov 29, 2025 Signature of Notary: _____
Name of Notary: Lenette Trivett

Applicant's Name Greystar Development East, LLC, a Delaware limited liability company Signature _____ Date 10/7/2025
Lewis Stoneburner, Vice President

Notary to Applicant: The foregoing instrument was acknowledged before me by means of [X] physical presence or [ ] online notarization this 7 day of October, 2025 by Lewis Stoneburner as Vice President for Greystar Development East, LLC, who is X personally known to me or ___ provided identification: _____.

Signature of Notary: _____
(NOTARY SEAL) Name of Notary: Christie Kielty

CHRISTIE L. KIELTY MY COMMISSION # HH 169330 EXPIRES: November 12, 2025 Bonded Thru Notary Public Underwriters

Docusign Envelope ID: C5384EB3-AE5C-4360-BF9F-0655762928E2

I/We West Dade County Associates, a Florida general partnership as Owner (s) of Lot (s) a portion of Tract A

Block _____ Section _____ PB/PG 117/84

of property which is located at the northeast corner of Tract A of Plat Book 117, Page 84, generally desire to file an application for review before the City, I/We do understand and agree as follows:

1. That the application for public hearing will not be heard unless the applicant is present at the hearing.
2. The property will be posted with a sign, which must not be removed until after the public hearing, at which time the City staff will remove the sign. The applicant will be responsible for advertising the application and sending the mail out per the notification requirements of the City Code.
3. That the requirements of the Municipal Code, Miami-Dade County Ordinances, the Florida Building Code (FBC), and other government agencies may affect the scheduling and ability to obtain/ issue a permit for the proposal.
4. That the only exceptions to the City's Land Development Code (LDC) are those that have been specified in the written application (via variance application) and any other code or plan issues will be corrected by modifying the plans to comply with the respective codes and ordinances of the City of Doral or Miami-Dade County ordinances.
5. That the applicant will be responsible for complying with all the conditions and restrictions imposed by the City Council or City Staff in connection with the request and will take the necessary steps to make the request effective if approved by the City Council or City Staff.
6. That it is the responsibility of the applicant to submit a complete application with all of the documents necessary for the City Council or City Staff to consider the applicant's request.
7. That the applicant is responsible for timely submission and accuracy of all items requested on the application. Any information submitted less than 45 days prior to a public hearing will result in being postponed to the next available hearing date. Legislative items must have all requested items submitted 30 days prior to hearing.
8. That the applicant is responsible for any additional fees which include but are not limited to mailing notices to surrounding property owners, advertising, outside consultant reviews, legal fees, surveys, and technical reports.

I/We as the owners of the subject property (check one):

X do hereby authorize James Williams Jr., Esq. and Gunster, Yoakley, Stewart, P.A. on behalf of Greystar Development East, LLC as the applicant to act on my/our behalf as the applicant.

will on my/our own behalf act as applicant(s), and make application in connection with this request for a public hearing administrative review before the City Council or City Staff.

Owner's Name West Dade County Associates, a Florida general partnership Signature _____ Date 3/16/26

Name John Ruth Title CAO

Notary to Owner: The foregoing instrument was acknowledged before me by means of [ ] physical presence or [ ] online notarization this 16th day of March, 2025 by John Ruth as CAO for West Dade County Associates, who is X personally known to me or ___ provided identification: _____.

Jan L. Locke
Notary Public, State of Indiana
Johnson County
Commission Number NP0767149
My Commission Expires
November 16, 2033

(NOTARY SEAL) Signature of Notary: _____
Name of Notary: Jan L. Locke

Applicant's Name Greystar Development East, LLC, a Delaware limited liability company Signature _____ Date 10/7/2025

Lewis Stoneburner, Vice President

Notary to Applicant: The foregoing instrument was acknowledged before me by means of [X] physical presence or [ ] online notarization this 7 day of October, 2025 by Lewis Stoneburner as Vice President for Greystar Development East, LLC, who is X personally known to me or ___ provided identification: _____.

Signature of Notary: _____
Name of Notary: Christie Kielty

(NOTARY SEAL)

CHRISTIE L. KIELTY
MY COMMISSION # HH 189330
EXPIRES: November 12, 2025
Bonded Thru Notary Public Underwriters

City Code Sec. 2-279, *Charges for consulting services established.*

(a)The city manager or his/her designee, in the review of any application, may refer any such application presented to it to such engineering, planning, legal, technical, or environmental consultant or professionals employed by the city as the manager shall deem reasonably necessary to enable him to review such application as required by law. Charges made by such consultant shall be in accord with the charges customarily made for such services in the county, and pursuant to an existing contractual agreement by and between the city and such consultant. Charges made by the city shall be in accord with the hourly rates charged by such consultants or hourly rates of employed professionals and shall be paid on submission of a city voucher.(b)The applicant shall reimburse the city for the cost of such consultant or employed professional services upon submission of a copy of the voucher, within 30 days of submission of a copy of the voucher and as a condition of the zoning resolution. These fees are in addition to any and all other fees required by other law, rule, or regulation of this Code. (Ordinance No. 04-07)

I, EWE RETAIL II LTD, a Florida limited partnership (Property Owner), hereby acknowledge and consent to the payment of all applicable fees as it relates to the application and request for the review and processing of the requested Administrative Hearing, Public Hearing, or legal instrument. Fees shall include, but are not limited to review by city staff, city contractors, agents or consultants, advertisement(s), recordings, mailings, and any additional costs related to the submitted application.

Affidavit to be executed by property owner. All right and entitlements run with the property.

Owner's Name EWE RETAIL II LTD, a Florida limited partnership Signature X _____ Date 10-15-25

Name Edward J. Easton

Title Manager

Notary to Owner: The foregoing instrument was acknowledged before me by means of [✓] physical presence or [ ] online notarization this 15 day of OCT., 2025 by Edward J. Easton as Mgr. for EWE RETAIL II LTD, who is ✓ personally known to me or ___ provided identification: _____.

(NOTARY SEAL) LENETTE TRIVETT
Notary Public - State of Florida
Commission # HH 167678
My Comm. Expires Nov 29, 2025
Bonded through National Notary Assn.

Signature of Notary: _____

Name of Notary: Lenette Trivett

Applicant's Name Greystar Development East, LLC, a Delaware limited liability company Signature _____ Date 10/7/2025

Lewis Stoneburner, Vice President

Notary to Applicant: The foregoing instrument was acknowledged before me by means of [X] physical presence or [ ] online notarization this 7 day of October, 2025 by Lewis Stoneburner as Vice President for Greystar Development East, LLC, who is X personally known to me or ___ provided identification: _____.

(NOTARY SEAL) CHRISTIE L. KIELTY
MY COMMISSION # HH 189330
EXPIRES: November 12, 2025
Bonded Thru Notary Public Underwriters

Signature of Notary: _____

Name of Notary: Christie Kielty

City Code Sec. 2-279, *Charges for consulting services established.*

(a)The city manager or his/her designee, in the review of any application, may refer any such application presented to it to such engineering, planning, legal, technical, or environmental consultant or professionals employed by the city as the manager shall deem reasonably necessary to enable him to review such application as required by law. Charges made by such consultant shall be in accord with the charges customarily made for such services in the county, and pursuant to an existing contractual agreement by and between the city and such consultant. Charges made by the city shall be in accord with the hourly rates charged by such consultants or hourly rates of employed professionals and shall be paid on submission of a city voucher.(b)The applicant shall reimburse the city for the cost of such consultant or employed professional services upon submission of a copy of the voucher, within 30 days of submission of a copy of the voucher and as a condition of the zoning resolution. These fees are in addition to any and all other fees required by other law, rule, or regulation of this Code. (Ordinance No. 04-07)

I, JCP INTERNATIONAL I LLC, a Florida limited liability company (Property Owner), hereby acknowledge and consent to the payment of all applicable fees as it relates to the application and request for the review and processing of the requested Administrative Hearing, Public Hearing, or legal instrument. Fees shall include, but are not limited to review by city staff, city contractors, agents or consultants, advertisement(s), recordings, mailings, and any additional costs related to the submitted application.

Affidavit to be executed by property owner. All right and entitlements run with the property.

Owner's Name JCP INTERNATIONAL I LLC, a Florida limited liability company Signature X _____ Date 10-15-25

Name Edward J. Easton

Title Manager

Notary to Owner: The foregoing instrument was acknowledged before me by means of [✓] physical presence or [ ] online notarization this 15 day of OCT., 2025 by Edward J. Easton as Mgr. for JCP INTERNATIONAL I LLC, who is ✓ personally known to me or ___ provided identification: _____.

(NOTARY SEAL) LENETTE TRIVETT Notary Public - State of Florida Commission # HH 167678 My Comm. Expires Nov 29, 2025 Bonded through National Notary Assn.

Signature of Notary: _____

Name of Notary: Lenette Trivett

Applicant's Name Greystar Development East, LLC, a Delaware limited liability company Signature _____ Date 10/7/2025

Lewis Stoneburner, Vice President

Notary to Applicant: The foregoing instrument was acknowledged before me by means of [✓] physical presence or [ ] online notarization this 7 day of October, 2025 by Lewis Stoneburner as Vice President for Greystar Development East, LLC, who is X personally known to me or ___ provided identification: _____.

Signature of Notary: _____

Name of Notary: Christie Kielty

(NOTARY SEAL) CHRISTIE L. KIELTY MY COMMISSION # HH 189330 EXPIRES: November 12, 2026 Bonded Thru Notary Public Underwriters

Docusign Envelope ID: C5384EB3-AE5C-4360-BF9F-0655762928E2

City Code Sec. 2-279, *Charges for consulting services established.*

(a)The city manager or his/her designee, in the review of any application, may refer any such application presented to it to such engineering, planning, legal, technical, or environmental consultant or professionals employed by the city as the manager shall deem reasonably necessary to enable him to review such application as required by law. Charges made by such consultant shall be in accord with the charges customarily made for such services in the county, and pursuant to an existing contractual agreement by and between the city and such consultant. Charges made by the city shall be in accord with the hourly rates charged by such consultants or hourly rates of employed professionals and shall be paid on submission of a city voucher.(b)The applicant shall reimburse the city for the cost of such consultant or employed professional services upon submission of a copy of the voucher, within 30 days of submission of a copy of the voucher and as a condition of the zoning resolution. These fees are in addition to any and all other fees required by other law, rule, or regulation of this Code. (Ordinance No. 04-07)

I, West Dade County Associates, a Florida general partnership (Property Owner), hereby acknowledge and consent to the payment of all applicable fees as it relates to the application and request for the review and processing of the requested Administrative Hearing, Public Hearing, or legal instrument. Fees shall include, but are not limited to review by city staff, city contractors, agents or consultants, advertisement(s), recordings, mailings, and any additional costs related to the submitted application.

Affidavit to be executed by property owner. All right and entitlements run with the property.

Owner's Name West Dade County Associates, a Florida general partnership Signature _____ Date 3/16/26

Name John Rulli

Title Chief Administrative Officer

Notary to Owner: The foregoing instrument was acknowledged before me by means of [X] physical presence or [ ] online notarization this 16th day of March, 2025 by John Rulli as CAO for West Dade County Associates, who is X personally known to me or ___ provided identification: _____

(NOTARY SEAL) Jan L. Locke Notary Public, State of Indiana Johnson County Commission Number NP0767149 My Commission Expires November 16, 2033

Signature of Notary: _____

Name of Notary: Jan L. Locke

Applicant's Name Greystar Development East, LLC, a Delaware limited liability company Signature _____ Date 10/7/2025

Lewis Stoneburner, Vice President

Notary to Applicant: The foregoing instrument was acknowledged before me by means of [X] physical presence or [ ] online notarization this 7 day of October, 2025 by Lewis Stoneburner as Vice President for Greystar Development East, LLC, who is X personally known to me or ___ provided identification: _____.

(NOTARY SEAL) CHRISTIE L. KIELTY MY COMMISSION # HH 189330 EXPIRES: November 12, 2025 Bonded Thru Notary Public Underwriters

Signature of Notary: _____

Name of Notary: Christie Kielty

8401 NW 53 TERRACE SECOND FLOOR, DORAL, FLORIDA 33166 • (305) 59DORAL (593-6725) • FAX: (305) 593-6768 • WEBSITE: cityofdoral.com

DISCLOSURE OF INTEREST*

If a **CORPORATION** owns or leases the subject property, list principal stockholders and percent of stock owned by each. [Note: Where principal officers or stockholders consist of other corporation(s), trust(s), partnership(s) or similar entities, further disclosure shall be made to identify the natural persons having the ultimate ownership interest].

CORPORATION NAME: _____

NAME AND ADDRESS	Percentage of Stock

If a **TRUST or ESTATE** owns or leases the subject property, list the trust beneficiaries and percent of interest held by each. [Note: Where beneficiaries are other than natural persons, further disclosure shall be made to identify the natural persons having the ultimate ownership interest].

TRUST/ESTATE NAME: _____

NAME AND ADDRESS	Percentage of Interest

If a **PARTNERSHIP** owns or leases the subject property, list the principals including general and limited partners. [Note: Where partner(s) consist of other partnership(s), corporation(s), trust(s) or similar entities, further disclosure shall be made to identify the natural persons having the ultimate ownership interests].

PARTNERSHIP OR LIMITED PARTNERSHIP NAME: EWE RETAIL II LTD, a Florida limited partnership

NAME AND ADDRESS	Percent of Ownership
Please see Exhibit C.	

If there is a **CONTRACT FOR PURCHASE** by a Corporation, Trust or Partnership, list purchasers below, including principal officers, stockholders, beneficiaries or partners. [Note: Where principal officers, stockholders, beneficiaries or partners consist of other corporations, trusts, partnerships or similar entities, further disclosure shall be made to identify natural persons having ultimate ownership interests].

NAME OF PURCHASER: Greystar Development East, LLC, a Delaware limited liability company

NAME, ADDRESS AND OFFICE (if applicable)	Percentage of Interest
Please see Exhibit "B"	

Date of contract: _____

If any contingency clause or contract terms involve additional parties, list all individuals or officers, if a corporation, partnership or trust:

_____

_____

_____

_____

_____

NOTICE: For changes of ownership or changes in purchase contracts after the date of the application, but prior to the date of final public hearing, a supplemental disclosure of interest is required.

The above is a full disclosure of all parties of interest in this application to the best of my knowledge and belief.

Signature: _____ Lewis Stoneburner, Vice President of Greystar Development East LLC
(Applicant)

Sworn to and subscribed before me this 7th day of October, 2025. Affiant is personally known to me or has produced _____ as identification.

CKielty
(Notary Public)

My commission expires 11/12/2025

CHRISTIE L. KIELTY
MY COMMISSION # HH 189330
EXPIRES: November 12, 2025
Bonded Thru Notary Public Underwriters

*Disclosure shall not be required of: 1) any entity, the equity interests in which are regularly traded on an established securities market in the United States or another country; or 2) pension funds or pension trusts of more than five thousand (5,000) ownership interests; or 3) any entity where ownership interests are held in a partnership, corporation or trust consisting of more than five thousand (5,000) separate interests, including all interests at every level of ownership and where no one (1) person or entity holds more than a total of five per cent (5%) of the ownership interest in the partnership, corporation or trust. Entities whose ownership interests are held in a partnership, corporation, or trust consisting of more than five thousand (5,000) separate interests, including all interests at every level of ownership, shall only be required to disclose those ownership interest which exceed five (5) percent of the ownership interest in the partnership, corporation or trust.

DISCLOSURE OF INTEREST*

If a **CORPORATION** owns or leases the subject property, list principal stockholders and percent of stock owned by each. [Note: Where principal officers or stockholders consist of other corporation(s), trust(s), partnership(s) or similar entities, further disclosure shall be made to identify the natural persons having the ultimate ownership interest].

CORPORATION NAME: JCP INTERNATIONAL I LLC, a Florida limited liability company

NAME AND ADDRESS	Percentage of Stock
Please see Exhibit D.	

If a **TRUST or ESTATE** owns or leases the subject property, list the trust beneficiaries and percent of interest held by each. [Note: Where beneficiaries are other than natural persons, further disclosure shall be made to identify the natural persons having the ultimate ownership interest].

TRUST/ESTATE NAME: _____

NAME AND ADDRESS	Percentage of Interest

If a **PARTNERSHIP** owns or leases the subject property, list the principals including general and limited partners. [Note: Where partner(s) consist of other partnership(s), corporation(s), trust(s) or similar entities, further disclosure shall be made to identify the natural persons having the ultimate ownership interests].

PARTNERSHIP OR LIMITED PARTNERSHIP NAME: _____

NAME AND ADDRESS	Percent of Ownership

If there is a **CONTRACT FOR PURCHASE** by a Corporation, Trust or Partnership, list purchasers below, including principal officers, stockholders, beneficiaries or partners. [Note: Where principal officers, stockholders, beneficiaries or partners consist of other corporations, trusts, partnerships or similar entities, further disclosure shall be made to identify natural persons having ultimate ownership interests].

NAME OF PURCHASER:_____

NAME, ADDRESS AND OFFICE (if applicable)	Percentage of Interest

Date of contract:_____

If any contingency clause or contract terms involve additional parties, list all individuals or officers, if a corporation, partnership or trust:

_____

_____

_____

_____

_____

NOTICE: For changes of ownership or changes in purchase contracts after the date of the application, but prior to the date of final public hearing, a supplemental disclosure of interest is required.

The above is a full disclosure of all parties of interest in this application to the best of my knowledge and belief.

Signature: _____ Lewis Stoneburner, Vice President of Greystar Development East LLC
(Applicant)

Sworn to and subscribed before me this 7th day of October, 2025. Affiant is personally known to me or has produced _____ as identification.

_____
(Notary Public)

My commission expires 11/12/2025

CHRISTIE L. KIELTY
MY COMMISSION # HH 189330
EXPIRES: November 12, 2025
Bonded Thru Notary Public Underwriters

*Disclosure shall not be required of: 1) any entity, the equity interests in which are regularly traded on an established securities market in the United States or another country; or 2) pension funds or pension trusts of more than five thousand (5,000) ownership interests; or 3) any entity where ownership interests are held in a partnership, corporation or trust consisting of more than five thousand (5,000) separate interests, including all interests at every level of ownership and where no one (1) person or entity holds more than a total of five per cent (5%) of the ownership interest in the partnership, corporation or trust. Entities whose ownership interests are held in a partnership, corporation, or trust consisting of more than five thousand (5,000) separate interests, including all interests at every level of ownership, shall only be required to disclose those ownership interest which exceed five (5) percent of the ownership interest in the partnership, corporation or trust.

DISCLOSURE OF INTEREST*

If a **CORPORATION** owns or leases the subject property, list principal stockholders and percent of stock owned by each. [Note: Where principal officers or stockholders consist of other corporation(s), trust(s), partnership(s) or similar entities, further disclosure shall be made to identify the natural persons having the ultimate ownership interest].

CORPORATION NAME: _____

NAME AND ADDRESS	Percentage of Stock

If a **TRUST or ESTATE** owns or leases the subject property, list the trust beneficiaries and percent of interest held by each. [Note: Where beneficiaries are other than natural persons, further disclosure shall be made to identify the natural persons having the ultimate ownership interest].

TRUST/ESTATE NAME: _____

NAME AND ADDRESS	Percentage of Interest

If a **PARTNERSHIP** owns or leases the subject property, list the principals including general and limited partners. [Note: Where partner(s) consist of other partnership(s), corporation(s), trust(s) or similar entities, further disclosure shall be made to identify the natural persons having the ultimate ownership interests].

PARTNERSHIP OR LIMITED PARTNERSHIP NAME: West Dade County Associates, a Florida general partnership

NAME AND ADDRESS	Percent of Ownership
Please see Exhibit E.	

If there is a **CONTRACT FOR PURCHASE** by a Corporation, Trust or Partnership, list purchasers below, including principal officers, stockholders, beneficiaries or partners. [Note: Where principal officers, stockholders, beneficiaries or partners consist of other corporations, trusts, partnerships or similar entities, further disclosure shall be made to identify natural persons having ultimate ownership interests].

NAME OF PURCHASER:_____

NAME, ADDRESS AND OFFICE (if applicable)	Percentage of Interest

Date of contract:_____

If any contingency clause or contract terms involve additional parties, list all individuals or officers, if a corporation, partnership or trust:

_____

_____

_____

_____

_____

NOTICE: For changes of ownership or changes in purchase contracts after the date of the application, but prior to the date of final public hearing, a supplemental disclosure of interest is required.

The above is a full disclosure of all parties of interest in this application to the best of my knowledge and belief.

Signature: _____ Lewis Stoneburner, Vice President of Greystar Development East LLC
(Applicant)

Sworn to and subscribed before me this 7th day of October, 2025. Affiant is personally known to me or has produced _____ as identification.

_____
(Notary Public)

My commission expires 11/12/2025

CHRISTIE L. KIELTY
MY COMMISSION # HH 189330
EXPIRES: November 12, 2025
Bonded Thru Notary Public Underwriters

*Disclosure shall not be required of: 1) any entity, the equity interests in which are regularly traded on an established securities market in the United States or another country; or 2) pension funds or pension trusts of more than five thousand (5,000) ownership interests; or 3) any entity where ownership interests are held in a partnership, corporation or trust consisting of more than five thousand (5,000) separate interests, including all interests at every level of ownership and where no one (1) person or entity holds more than a total of five per cent (5%) of the ownership interest in the partnership, corporation or trust. Entities whose ownership interests are held in a partnership, corporation, or trust consisting of more than five thousand (5,000) separate interests, including all interests at every level of ownership, shall only be required to disclose those ownership interest which exceed five (5) percent of the ownership interest in the partnership, corporation or trust.

Exhibit A
List of Property Owners

Property No. 1

Address: 1625 NW 107 Avenue, Miami Florida

Folio No.: 35-3032-008-0050

Owner: EWE RETAIL II LTD, a Florida limited partnership
10165 NW 19 Street,
Doral, Florida 33172

Acquired: October 10, 2024

Property No. 2

Address: 1603 NW 107 Avenue, Miami Florida

Folio No.: 35-3032-008-0140

Owner: JCP INTERNATIONAL I LLC, a Florida limited liability company
10165 NW 19 Street,
Doral, Florida 33172

Acquired: October 1, 2024

Property No. 3

Folio No.: 35-3032-008-0010

Owner: West Dade County Associates, a Florida general partnership
115 W Washington Street, Suite 15E
Indianapolis, IN 46204

Acquired: January 22, 1981

Exhibit B

DISCLOSURE OF INTEREST

Greystar Development East, LLC **(465 Meeting St. Ste 500, Charleston, SC 29403)**

Directors/Officers:

Robert A. Faith
J. Derek Ramsey
Ashley Heggie
Matthew Warren
Todd Wigfield
Lewis Stoneburner
Kristin Schul
Michael Sullivan
Kurt Wolber
George Hayward
John Clarkson
Darin Cook
Joshua Glover
Gary Kerr
David King
Ben Liebetrau
John Roberson
Julie Skolnicki
Christopher Mazzola

GREYSTAR DEVELOPMENT EAST, LLC IS AN LLC CONSISTING OF MORE THAN 5,000 SEPARATE INTERESTS, INCLUDING ALL INTEREST AT EVERY LEVEL OF OWNERSHIP, WHERE NO ONE PERSON OR ENTITY HOLDS MORE THAN A FIVE PERCENT OWNERSHIP INTEREST IN THE LLC, WITH THE EXCEPTION OF ROBERT A. FAITH, WHOSE OVERALL INTEREST IS IN EXCESS OF FIVE PERCENT.

Exhibit C
Disclosure of Interest

EWE RETAIL II, LTD (SEARS)
OWNERSHIP

INVESTORS	PERCENTAGE INTEREST	CAPITAL
Amy Kelly-Easton	0.35714%	50,000.00
Andrew R. Easton	1.42857%	200,000.00
Cannon Miami LLC (Andrew Rosen)	10.71429%	1,500,000.00
Christopher V. Damian Revocable Trust	2.14286%	300,000.00
Collin J. Easton	0.17857%	25,000.00
Daniel L. Easton	0.17857%	25,000.00
Daniel Shenkman	1.78571%	250,000.00
David Wilf	0.35714%	50,000.00
Easton Real Estate Holdings, LLC	3.03571%	425,000.00
Edward Dalton Easton	1.42857%	200,000.00
Edward J. Easton	1.07143%	150,000.00
Edward W. Easton	1.07143%	150,000.00
Edward W. Easton Family, Ltd	8.57143%	1,200,000.00
ELE Investment Group, LLC	0.53571%	75,000.00
Furman Family Holding LLC	3.57143%	500,000.00
Gary & Tamara Braverman	7.14286%	1,000,000.00
Harrison Easton	0.17857%	25,000.00
Ira London	0.71429%	100,000.00
Jake Weiss LLC	0.53571%	75,000.00
Mahalo Partners, LLC	3.57143%	500,000.00
Mark L. & Tobi R. Weiss TBE	0.71429%	100,000.00
Martin Silver, Trustee of Martin Silver Revocable Trust	3.57143%	500,000.00
Michael L. Shenkman	1.78571%	250,000.00
Jill Braufman 2017 Family Trust	10.71429%	1,500,000.00
Shenkman Partners LLC	7.14286%	1,000,000.00
Control Limited Partnership (Stig Wennerstrom)	1.96429%	275,000.00
Melanie A. Mochan	0.17857%	25,000.00
Three Bears, LLC	0.35714%	50,000.00
EWE Retail II LLC (General Partner)	25.00000%	
TOTAL	**100.0000%**	**10,500,000.00**

EWE RETAIL II, LLC	PERCENTAGE INTEREST
Edward W. Easton	33.3333%
Edward J. Easton	33.3334%
Gary Braverman	33.3333%
	100.000%

GENERAL PARTNER

Exhibit D
Disclosure of Interest

JCP INTERNATIONAL I, LLC — **SINGLE MEMBER, OWNED 100% BY DD WAREHOUSE INVESTMENTS I, LTD**

DD Warehouse Investments I, Ltd	PERCENTAGE INTEREST	CAPITAL
Furman Family Holdings LLC	18.75000%	450,000.00
Stig Wennerstrom Revocable Trust	8.33333%	200,000.00
Edward W. Easton Family Limited	12.50000%	300,000.00
Easton Real Estate Holdings LLC	14.58333%	350,000.00
Gary & Tamara Braverman	12.50000%	300,000.00
Danielle Braverman	2.08333%	50,000.00
Andrew Easton	2.08333%	50,000.00
Elliot LaBreche	2.08333%	50,000.00
HSRE Holdings, LLC	2.08333%	50,000.00
DD Warehouse Investments I, LLC (GP)	25.0000%	
TOTAL	**100.0000%**	**1,800,000.00**

DD Warehouse Investments I, LLC	PERCENTAGE INTEREST
Dalton Easton	16.00000%
Gary & Tamara Braverman	25.22000%
Edward W. Easton	25.22000%
Edward J. Easton	12.61000%
The Robbi D. Easton Irrevocable Trust	12.61000%
Andrew Easton	2.78000%
Elliot LaBreche	2.78000%
HSRE Holdings, LLC	2.78000%
TOTAL	**100.0000%**

GENERAL PARTNER

EXHIBIT E

West Dade County Associates, a Florida general partnership

Simon Property Group, L.P., an Indiana limited partner, its managing partner – 100%

*Simon Property Group, Inc., an Indiana corporation, its general partner – 100%

*Simon Property Group, Inc., is an entity in which the equity interests are regularly traded on an established security market in the United States (NYSE).

LEGAL DESCRIPTION

THE PROPERTY

A PART OF TRACT A, MIAMI INTERNATIONAL MALL PROPERTIES, ACCORDING TO THE PLAT RECORDED IN PLAT BOOK 117, PAGE 84, PUBLIC RECORDS OF MIAMI-DADE COUNTY, FLORIDA, AND BEING MORE PARTICULARLY DESCRIBED AS FOLLOWS:

BEGINNING AT A PIPE IN CONCRETE MARKING THE SOUTHWEST CORNER OF SAID SECTION 32, TOWNSHIP 53 SOUTH, RANGE 40 EAST; THENCE, NORTH 89° 20' 55" EAST, ALONG THE SOUTH LINE OF SECTION 32, FOR A DISTANCE OF 2250.00 FEET TO A POINT; THENCE, NORTH 01° 43' 13" WEST FOR A DISTANCE OF 1149.03 FEET TO A POINT; THENCE, SOUTH 88° 16' 47" WEST FOR A DISTANCE OF 45.00 FEET TO A POINT; THENCE, NORTH 01° 43' 13" WEST FOR A DISTANCE OF 263.14 FEET TO A POINT, SAID POINT BEING THE PRINCIPAL POINT AND PLACE OF BEGINNING OF THE FOLLOWING DESCRIPTION; THENCE, DUE WEST FOR A DISTANCE OF 244.73 FEET TO A POINT; THENCE, DUE NORTH FOR A DISTANCE OF 102.00 FEET TO A POINT; THENCE, DUE WEST FOR A DISTANCE OF 432.00 FEET TO A POINT; THENCE, DUE NORTH FOR A DISTANCE OF 386.97 FEET TO A POINT; THENCE, NORTH 45° 00' 00" EAST FOR A DISTANCE OF 100.46 FEET TO A POINT; THENCE, DUE WEST FOR A DISTANCE OF 472.87 FEET TO A POINT; THENCE, SOUTH 45° 00' 00” WEST FOR A DISTANCE OF 171.25 TO A POINT; THENCE NORTH 45° 00' 00” WEST FOR A DISTANCE OF 413.50 FEET TO A POINT; THENCE; SOUTH 45° 00' 00” WEST FOR A DISTANCE OF 16.00 FEET TO A POINT; THENCE, NORTH 45° 00' 00” WEST FOR A DISTANCE OF 60.63 FEET TO A POINT IN THE INNER EDGE OF PERMANENT ACCESS EASEMENT, AS DESCRIBED IN OFFICIAL RECORD BOOK 11411 AT PAGE 1044 OF THE PUBLIC RECORDS OF MIAMI-DADE COUNTY FLORIDA; THENCE, NORTH 45° 00' 00” EAST, ALONG THE SAID INNER EDGE OF PERMANENT ACCESS EASEMENT, FOR A DISTANCE OF 29.00 FEET; THENCE, NORTH 45° 00' 00” WEST, AT RIGHT ANGLES TO LAST DESCRIBED COURSE, FOR A DISTANCE OF 64.00 FEET TO A POINT; THENCE, NORTH 45° 00' 00” EAST FOR A DISTANCE OF 538.58 FEET TO A POINT (LAST MENTIONED COURSE BEING ALONG THE SOUTHEASTERLY BOUNDARY LINE OF PARCEL VI-E AND ITS SOUTHWESTERLY EXTENSION, AS DESCRIBED IN OFFICIAL RECORD BOOK 11638, AT PAGE 1229 OF THE PUBLIC RECORDS OF MIAMI-DADE COUNTY FLORIDA); THENCE, NORTH 89° 38' 52” EAST, ALONG THE NORTH LINE OF THE SOUTHWEST 1/4 OF SECTION 32, TOWNSHIP 53 SOUTH, RANGE 40 EAST, FOR A DISTANCE OF 661.69 FEET TO A POINT; THENCE, SOUTH 45° 00' 00" WEST FOR A DISTANCE OF 53.79 FEET; THENCE, SOUTH 45° 00' 00” EAST FOR DISTANCE OF 721.50 FEET TO A POINT; THENCE, NORTH 45° 00' 00” EAST FOR A DISTANCE OF 105.72 FEET TO A POINT; THENCE, SOUTH 01° 43' 13” EAST FOR A DISTANCE OF 725.88 FEET TO A POINT; THENCE, SOUTH 88° 16' 47” WEST, AT RIGHT ANGLES TO LAST DESCRIBED

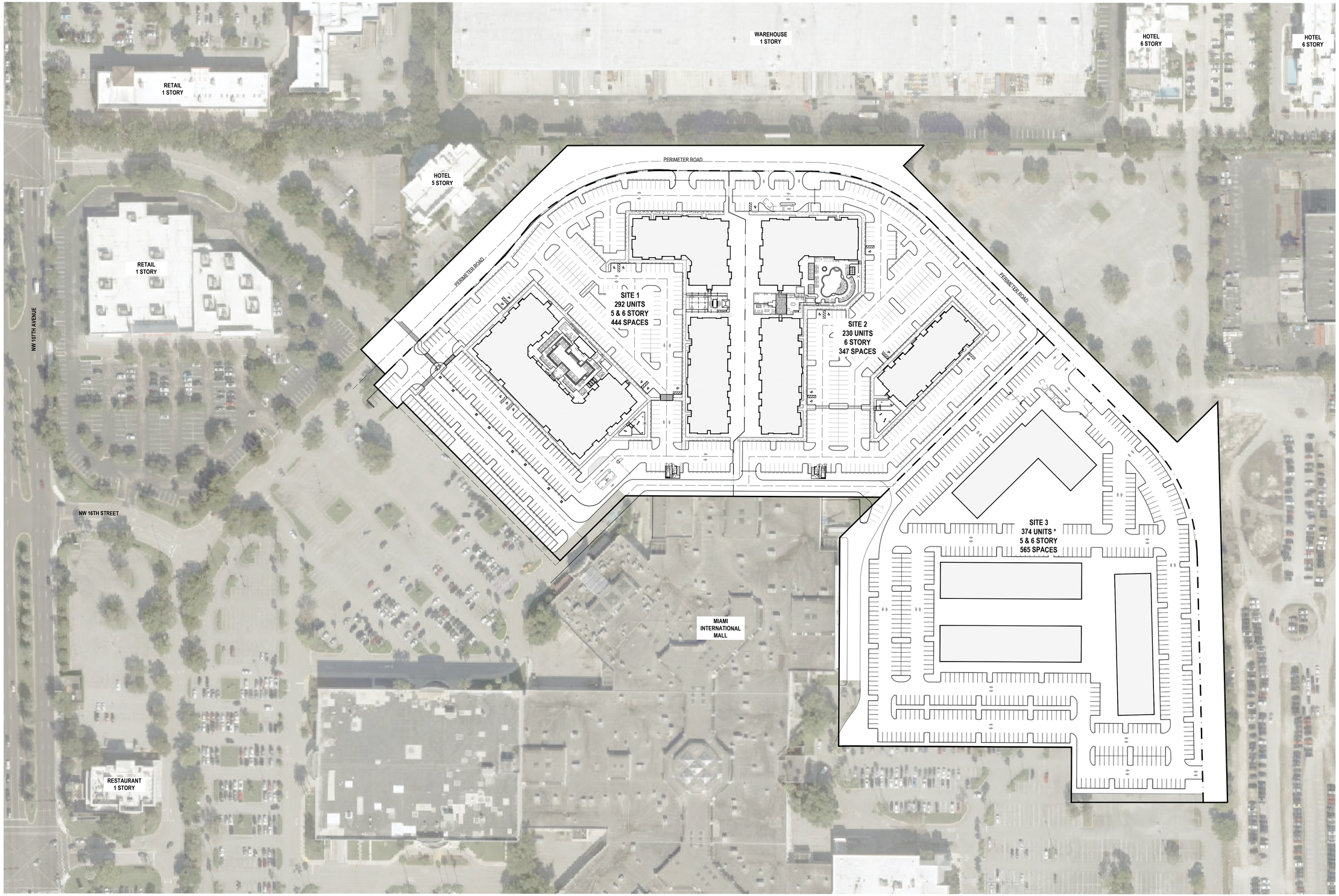

SITE DATA		
Property location	Miami International Mall	
Folio	35-3032-008-0050,35-3032-008-0010	
	35-3032-008-0140	
Zoning District	Mall Mixed-Use	
Future Land Use	Mall Mixed-Use	
Proposed Use	Multifamily Residential	
Site Area	1,115,659 sf	25.612 acres
Density *		
Minimum	30.0 du/ac	770.0 units
Maximum	35.0 du/ac	896.0 units
** Site 1 & Site 2: Maximum 522 units permitted in accordance with Sec. 86-83 (Creative Excellence).*		
** Site 3: Minimum of 248 units provided without density increase under Creative Excellence standards.*		

PROPERTY LINE

LIMITS OF RESIDENTIAL PROJECT

NORTH

DESIGNED FOR

THE EASTON GROUP & GREYSTAR

MIAMI INTERNATIONAL MALL
DORAL, FL

MSA ARCHITECTS
ARCHITECTURE & PLANNING

CONCEPTUAL SITE PLAN FOR RESIDENTIAL SITES
AT MIAMI INTERNATIONAL MALL

DATE: 05/05/2026

SCALE: 1" = 80'

COPYRIGHT 2025 MSA ARCHITECTS, INC THE ARCHITECTURAL DESIGN AND DETAIL DWGS. FOR THIS BLDG. AND/OR OVERALL PROJECT ARE THE LEGAL PROPERTY OF AND ALL RIGHTS ARE RESERVED BY THE ARCHITECT. THEIR USE FOR REPRODUCTION, CONSTRUCTION OR DISTRIBUTION IS PROHIBITED UNLESS AUTHORIZED IN WRITING BY THE ARCHITECT.

BOUNDARY SURVEY

FIELD SURVEY WAS COMPLETED ON: APRIL 29, 2025 AND UPDATED ON SEPTEMBER 23, 2025.

LEGEND AND ABBREVIATIONS

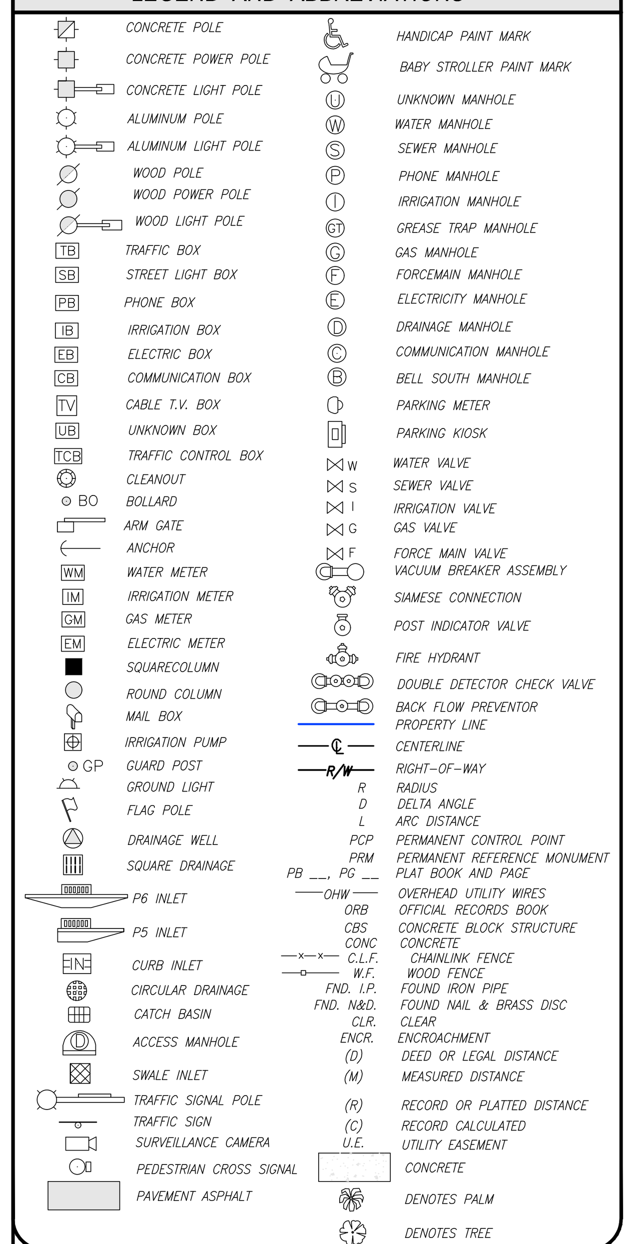

AREAS

- SEARS SITE:
  SUBJECT PROPERTY AREA: 565,951 SQ.FT. (12.992 ACRES)
- JC PENNY SITE:
  SUBJECT PROPERTY AREA: 419,055 SQ.FT. (9.620 ACRES)
- PARCEL K1:
  SUBJECT PROPERTY AREA: 6.276 SQ.FT. (0.144 ACRES)
- PARCEL K 2 :
  SUBJECT PROPERTY AREA: 9.734 SQ.FT. (0.223 ACRES)
- PARCEL K 3:
  SUBJECT PROPERTY AREA: 897 SQ.FT. (0.021 ACRES)
- PARCEL K 4 :
  SUBJECT PROPERTY AREA: 19,036 SQ.FT. (0.437 ACRES)
- PARCEL K 5 :
  SUBJECT PROPERTY AREA: 4,414 SQ.FT. (0.101 ACRES)
- A PORTION OF PERMANENT ACCESS EASEMENT
  SUBJECT PROPERTY AREA: 90,340 SQ.FT. (2.074 ACRES)
- TOTAL AREA: 1,115,703 SQ.FT (25.612 ACRES)

SURVEYOR'S NOTES

1. FIELD SURVEY WAS COMPLETED ON: APRIL 29, 2025 AND UPDATED ON SEPTEMBER 22, 2025.
2. LEGAL DESCRIPTION WAS PROVIDED BY THE CLIENT
3. SUBJECT PROPERTY AREA:
   SEARS SITE: 565,951 sq.ft. (12.992 Acres)
   PARCEL #1 - JC PENNY SITE : 419,055 sq.ft. (9.620 Acres)
   PARCEL K1: 6,276 sq.ft (0.144 Acres)
   PARCEL K2: 9.734 sq.ft (0.223 Acres)
   PARCEL K3: 897 SQ.FT. (0.021 ACRES)
   PARCEL K4: 19,036 SQ.FT. (0.437 ACRES)
   PARCEL K5: 4,414 SQ.FT. (0.101 ACRES)
   A PORTION OF PERMANENT ACCESS EASEMENT:
   90,340 SQ.FT. (2.074 ACRES)
4. BEARINGS BASED ON AN ASSUMED BEARING OF EAST ALONG THE NORTH LINE OF SUBJECT PROPERTY SITE #1.
5. DISTANCES ALONG BOUNDARY LINES, AS SHOWN HEREON, ARE RECORD AND/OR MEASURED UNLESS OTHERWISE NOTED.
6. INTERIOR LOT LINES, AS SHOWN HEREON, ARE FOR INFORMATIONAL PURPOSE ONLY, UNLESS OTHERWISE NOTED.
7. UNDERGROUND FOOTINGS, FOUNDATIONS AND HAVE NOT BEEN LOCATED AT THE TIME OF THIS SURVEY, UNLESS OTHERWISE NOTED.
8. ABOVEGROUND AND/OR VISIBLE UTILITIES HAVE BEEN LOCATED AT THE TIME OF THIS SURVEY, UNLESS OTHERWISE NOTED.
9. SUBJECT PROPERTY HAS A DIRECT PHYSICAL ACCESS TO AND FROM PERMANENT ACCESS EASEMENT.
10. THE SURVEYOR DOES NOT DETERMINE FENCE AND/OR WALL OWNERSHIP.
11. THERE IS A GAP BETWEEN SEARS SITE AND PERMANENT ACCESS EASEMENT.
12. THIS BOUNDARY SURVEY IS SUBJECT TO EASEMENTS, RIGHTS-OF-WAY AND OTHER MATTERS THAT MIGHT BE REFLECTED ON A SEARCH OF TITLE OF THE SUBJECT PROPERTY.

PROPERTY INFORMATION

SEARS SITE

- PROPERTY ADDRESS: 1625 NW 107th AVE
  CITY OF DORAL , MIAMI-DADE, FL 33172
- PARCEL ID : 35-3032-008-0050

JC PENNY SITE

- PROPERTY ADDRESS: 1603 NW 107th AVE
  CITY OF DORAL , MIAMI-DADE, FL 33172
- PARCEL ID : 35-3032-008-0140

CERTIFY TO:

- GREYSTAR DEVELOPMENT EAST, LLC, A DELAWARE LIMITED LIABILITY COMPANY
- FIRST AMERICAN TITLE INSURANCE COMPANY
- GREENBERG TRAURIG, PA

DATUM AND BENCHMARKS

- ELEVATIONS SHOWN HEREON REFER TO NATIONAL GEODETIC VERTICAL DATUM OF 1929 (N.G.V.D. 1929) AND ARE EXPRESSED IN FEET.
- BENCHMARK:
  NAME: H-450 .
  ELEVATION: 8.72 ' N.G.V.D.
  DESCRIPTION: PK NAIL AND ALUMINIUM WASHER SET ON CONC. SIDEWALK

FLOOD ZONE INFORMATION

- SUBJECT PROPERTY IS LOCATED WITHIN FLOOD ZONE "AH" (EL. 8 FEET) AND ZONE "X" AS SHOWN ON FLOOD INSURANCE RATE MAP NUMBER 12 086C0286L , DATED ON SEPTEMBER 11, 2009.
- ELEVATION REFER TO NATIONAL GEODETIC VERTICAL DATUM OF 1929 AND IS EXPRESSED IN FEET.

REVISIONS

DATE	JOB No.	REV.	BY:
05/27/25	155116	UPDATE TITLE OF COMMITMENT	C.A.F.
09/23/25	155443-5	UPDATE BOUNDARY SURVEY	C.A.F.
06/11/25	155443-5	UPDATE BOUNDARY SURVEY	C.A.F.

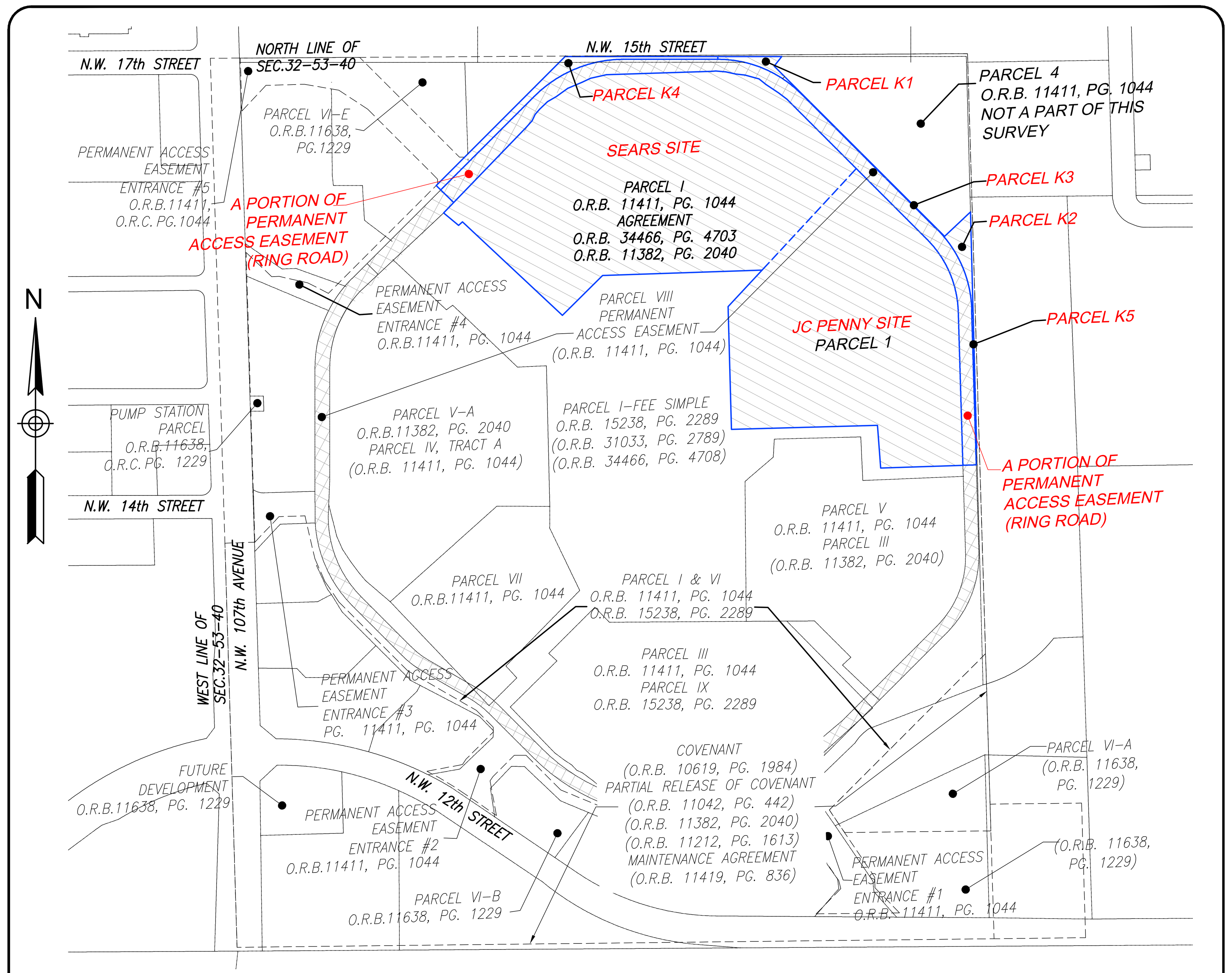

LOCATION MAP

A PORTION OF SECTION 06, TOWNSHIP 53 SOUTH, RANGE 40 EAST, MIAMI-DADE COUNTY, FLORIDA. SCALE 1"=300'

SKETCH OF LEGAL DESCRIPTION

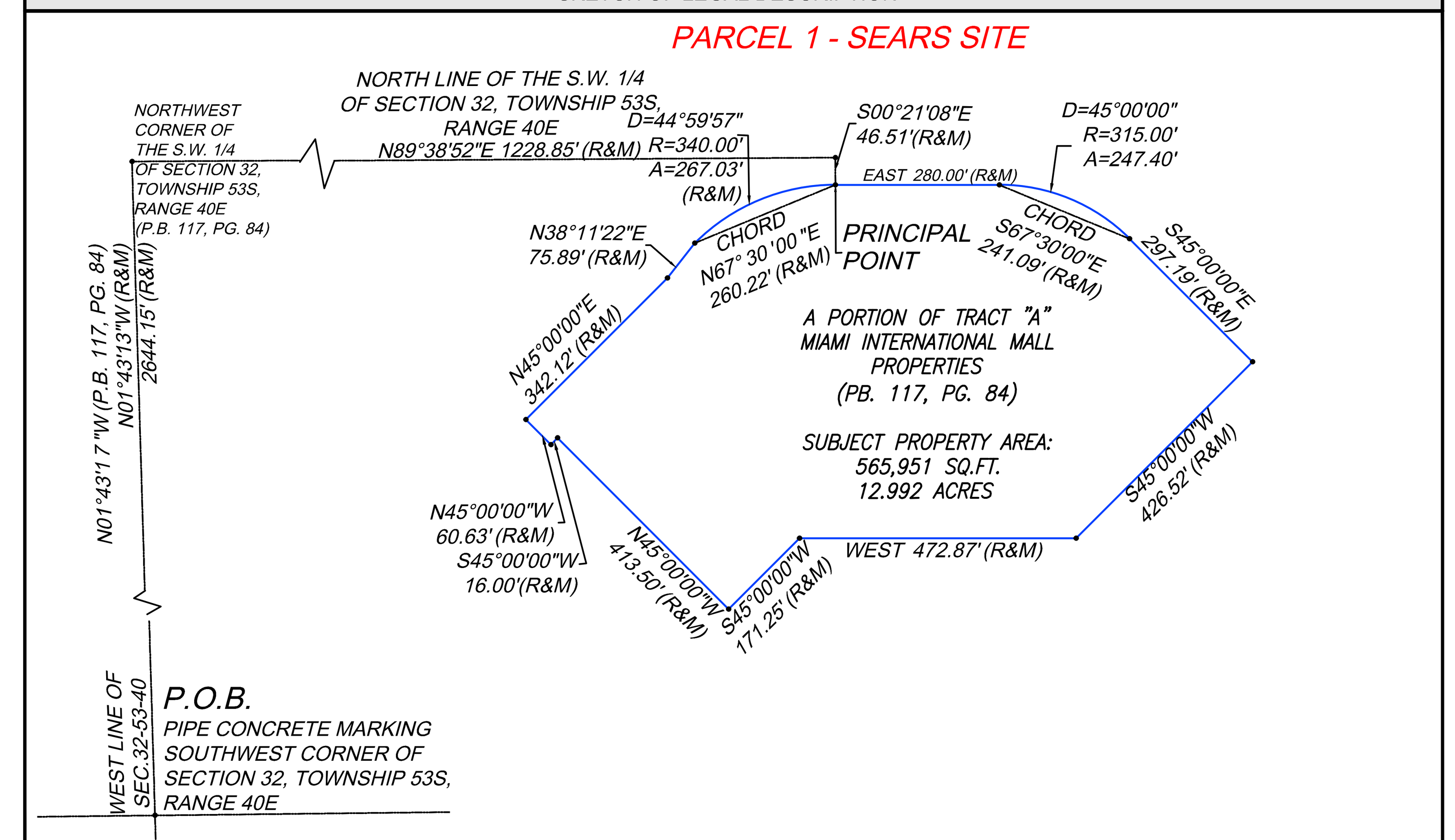

A PORTION OF SECTION 06, TOWNSHIP 53 SOUTH, RANGE 40 EAST, MIAMI-DADE COUNTY, FLORIDA. SCALE 1"=250'

SKETCH OF LEGAL DESCRIPTION

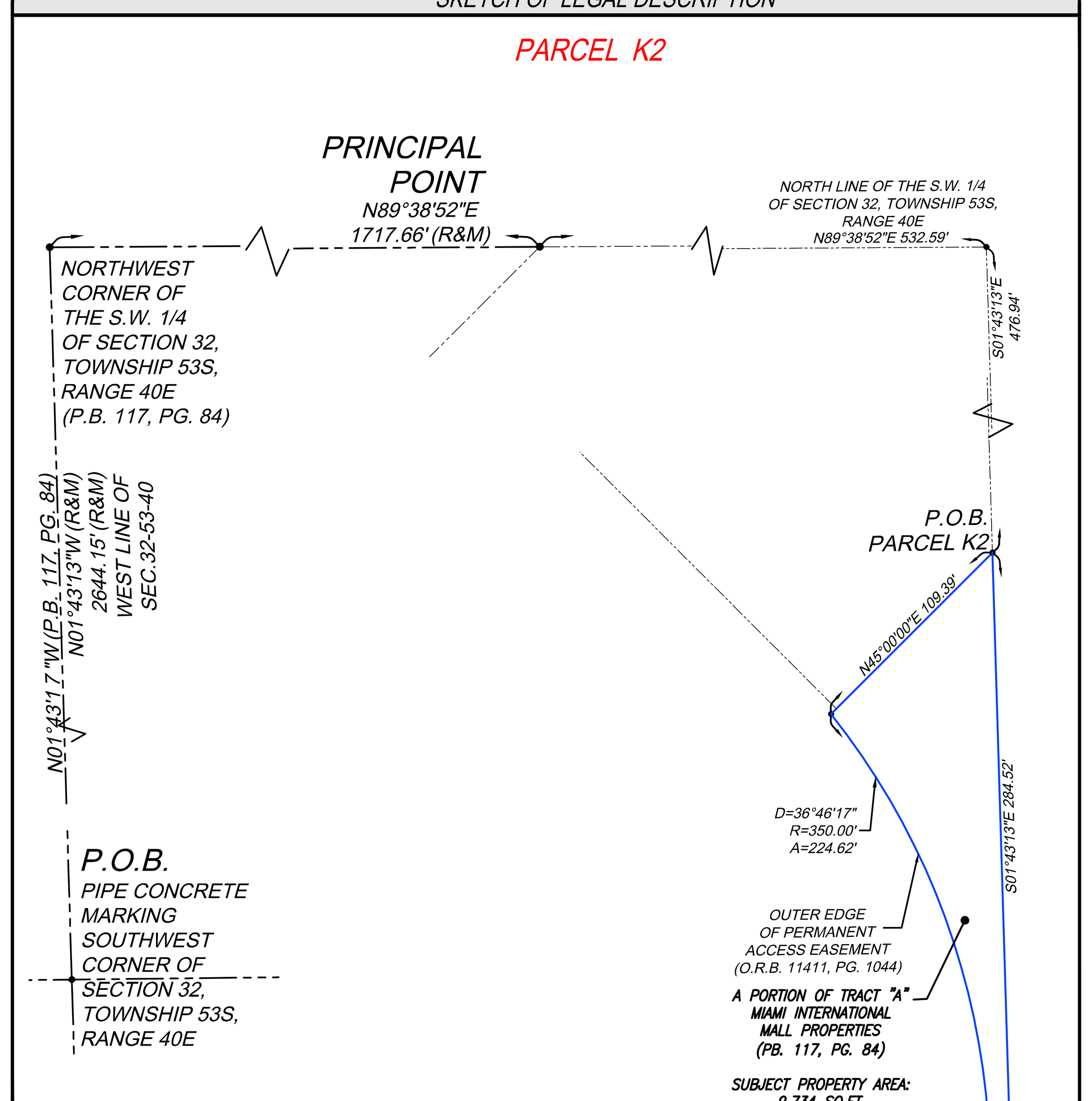

A PORTION OF SECTION 06, TOWNSHIP 53 SOUTH, RANGE 40 EAST, MIAMI-DADE COUNTY, FLORIDA. SCALE 1"=70'

SKETCH OF LEGAL DESCRIPTION

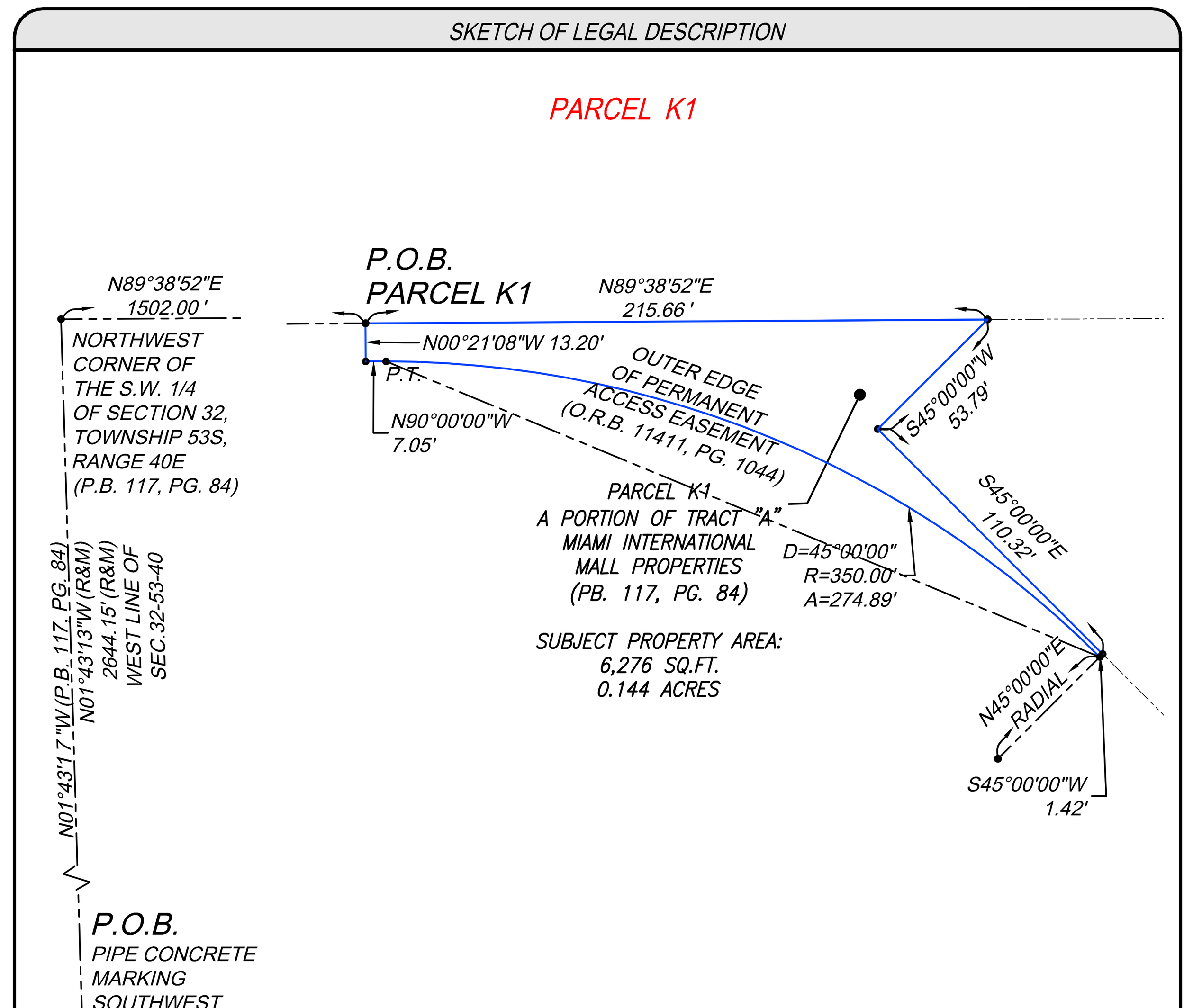

A PORTION OF SECTION 06, TOWNSHIP 53 SOUTH, RANGE 40 EAST, MIAMI-DADE COUNTY, FLORIDA. SCALE 1"=50'

SKETCH OF LEGAL DESCRIPTION

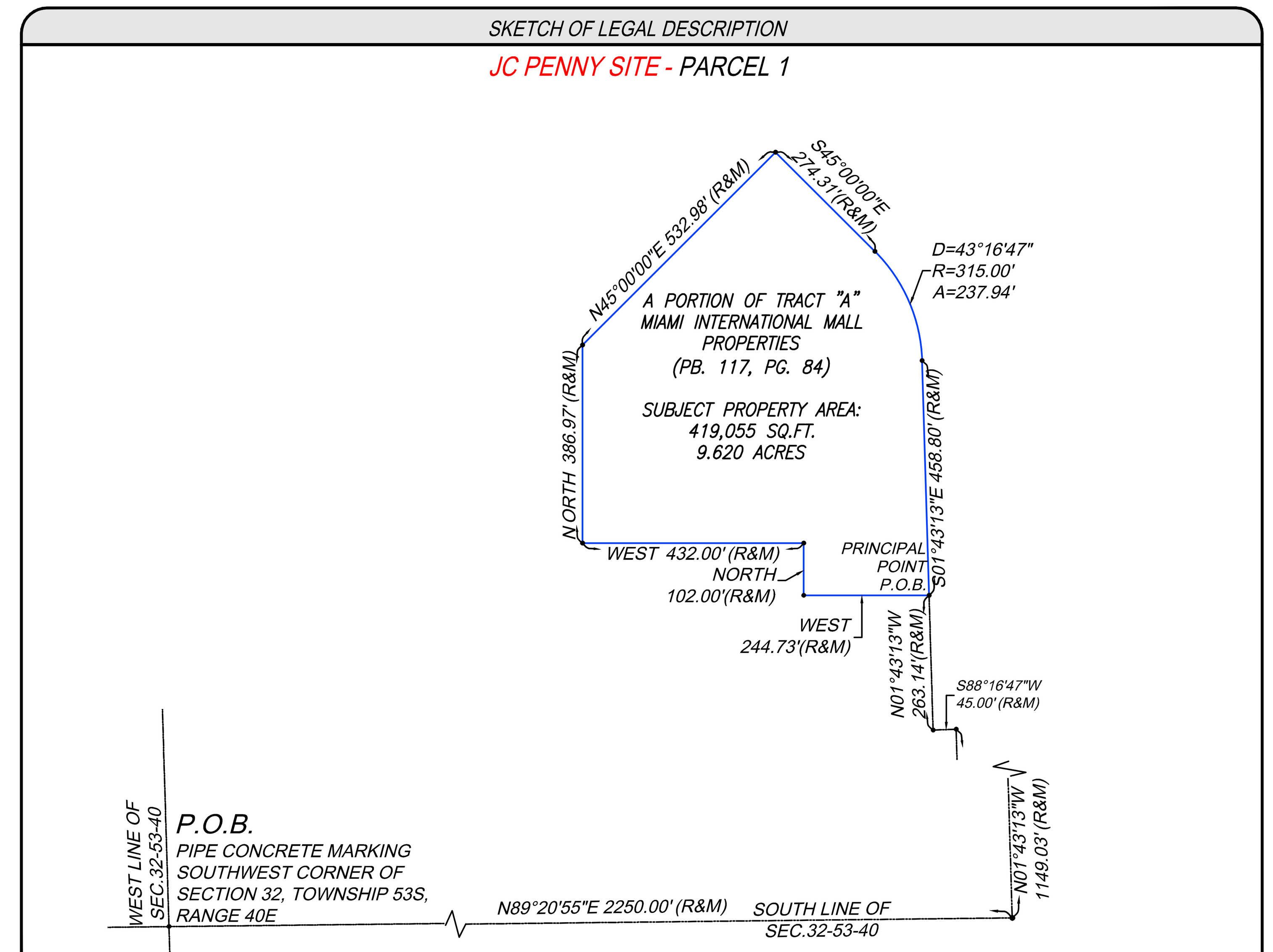

A PORTION OF SECTION 06, TOWNSHIP 53 SOUTH, RANGE 40 EAST, MIAMI-DADE COUNTY, FLORIDA. SCALE 1"=250'

SKETCH OF LEGAL DESCRIPTION

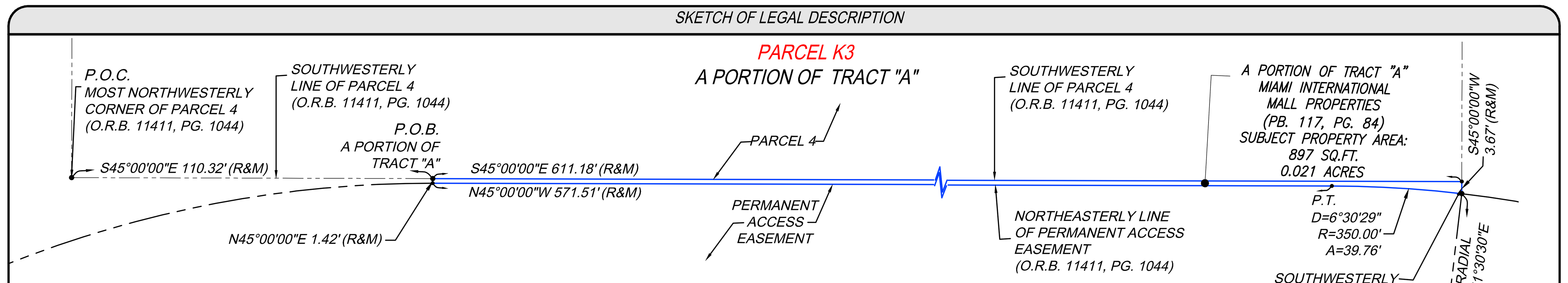

A PORTION OF SECTION 06, TOWNSHIP 53 SOUTH, RANGE 40 EAST, MIAMI-DADE COUNTY, FLORIDA. SCALE 1"=30'

BOUNDARY SURVEY

PREPARED FOR:

GREYSTAR DEVELOPMENT EAST, LLC

LYING AND BEING IN SECTION 32, TOWNSHIP 53 SOUTH, RANGE 40 EAST CITY OF DORAL, MIAMI-DADE COUNTY, FLORIDA.

J.Hernandez & Associates Inc
LAND SURVEYORS AND MAPPERS
CERTIFICATE OF AUTHORIZATION No. LB8092
3300 NW 112th AVE. SUITE #10, DORAL, FL 33172
(P) 305-526-0606 (E) info@jhasurveys.com

DRAWN BY: C.A.F.	CHECKED BY: J.G.H.	JOB NUM: 155116
DATE: 05/01/2025	DATE: 05/01/2025	F.B.: MD-80, PG. 30

LEGAL DESCRIPTION

SEARS SITE

A PARCEL OF LAND LOCATED WITHIN SECTION 32, TOWNSHIP 53 SOUTH, RANGE 40 EAST, LYING AND BEING IN DADE COUNTY, FLORIDA AND FURTHER BOUNDED AND DESCRIBED AS FOLLOWS:

BEGINNING AT A PIPE IN CONCRETE MARKING THE SOUTHWEST CORNER OF SAID SECTION 32, THENCE N 1° 43' 13" W, ALONG THE WEST LINE OF SAID SECTION 32, A DISTANCE OF 2644.15 FEET TO A POINT; THENCE N 89° 38' 52" E, A DISTANCE OF 1228.85 FEET TO A POINT; THENCE S 0° 21' 08" E, A DISTANCE OF 46.51 FEET TO THE PRINCIPAL POINT AND PLACE OF BEGINNING OF THE FOLLOWING DESCRIPTION:

THENCE DUE EAST, A DISTANCE OF 280.00 FEET TO A POINT; THENCE 247.40 FEET ALONG AN ARC TO THE RIGHT, HAVING A RADIUS OF 315.00 FEET AND A CHORD OF 241.09 FEET, BEARING S 67° 30' 00" E TO A POINT; THENCE S 45° 00' 00" E, A DISTANCE OF 297.19 FEET TO A POINT; THENCE S 45° 00' 00" W, A DISTANCE OF 426.52 FEET TO A POINT; THENCE DUE WEST, A DISTANCE OF 472.87 FEET TO A POINT; THENCE S 45° 00' 00" W, A DISTANCE OF 171.25 FEET TO A POINT; THENCE N 45° 00' 00" W, A DISTANCE OF 413.50 FEET TO A POINT; THENCE S 45° 00' 00" W, A DISTANCE OF 16.00 FEET TO A POINT; THENCE N 45° 00' 00" W, A DISTANCE OF 60.63 FEET TO A POINT; THENCE N 45° 00' 00" E, A DISTANCE OF 342.12 FEET TO A POINT; THENCE N 38° 11' 22.8" E, A DISTANCE OF 75.89 FEET TO A POINT; THENCE 267.04 FEET ALONG AN ARC TO THE RIGHT, HAVING A RADIUS OF 340.00 FEET AND A CHORD OF 260.22 FEET, BEARING N 67° 30' 00" E TO THE PRINCIPAL POINT AND PLACE OF BEGINNING.

TOGETHER WITH

JC PENNY SITE
PARCEL 1

A PART OF TRACT A, MIAMI INTERNATIONAL MALL PROPERTIES, ACCORDING TO THE PLAT RECORDED IN PLAT BOOK 117, PAGE 84, PUBLIC RECORDS OF MIAMI-DADE COUNTY, FLORIDA, AND FURTHER BOUNDED AND DESCRIBED AS FOLLOWS:

BEGINNING AT A PIPE IN CONCRETE MARKING THE SOUTHWEST COMER OF SAID SECTION 32, TOWNSHIP 53 SOUTH, RANGE 40 EAST; THENCE NORTH 89° 20' 55" EAST ALONG THE SOUTH LINE OF SECTION 32, A DISTANCE OF 2250.00 FEET TO A POINT; THENCE NORTH 01° 43' 13" WEST A DISTANCE OF 1149.03 FEET TO A POINT; THENCE SOUTH 88° 16' 47" WEST A DISTANCE OF 45.00 FEET TO A POINT; THENCE NORTH 01° 43' 13" WEST A DISTANCE OF 263.14 FEET TO A POINT, SAID POINT BEING THE PRINCIPAL POINT AND PLACE OF BEGINNING OF THE FOLLOWING DESCRIPTION: THENCE DUE WEST A DISTANCE OF 244.73 FEET TO A POINT; THENCE DUE NORTH A DISTANCE OF 102.00 FEET TO A POINT; THENCE DUE WEST A DISTANCE OF 432.00 FEET TO A POINT; THENCE DUE NORTH A DISTANCE OF 386.97 FEET TO A POINT; THENCE NORTH 45° 00' 00" EAST A DISTANCE OF 532.98 FEET TO A POINT; THENCE SOUTH 45° 00' 00" EASI A DISTANCE OF 274.31 FEET TO A POINT; THENCE 237.94 FEET ALONG AN ARC TO THE RIGHT, HAVING A RADIUS OF 315.00 FEET AND A CENTRAL ANGLE OF 43° 16' 47" TO A POINT; THENCE SOUTH 01°43' 13" EAST A DISTANCE OF 458.80 FEET TO A POINT, SAID POINT BEING THE PRINCIPAL POINT AND PLACE OF BEGINNING.

PARCEL 2

EASEMENT RIGHTS AS SET FORTH IN THE MIAMI INTERNATIONAL MALL EASEMENT AND OPERATING AGREEMENT BY AND AMONG SEARS, ROEBUCK AND CO .; ALSTORES REALTY CORPORATION; JORDAN MARSH COMPANY; FEDERATED DEPARTMENT STORES, INC .; ASSOCIATED DRY GOOD CORPORATION; AND WEST DADE COUNTY ASSOCIATES RECORDED APRIL 15, 1982 IN OFFICIAL RECORDS BOOK 11411, PAGE 1044: AS AFFECTED BY FIRST AMENDMENT TO EASEMENT AND OPERATING AGREEMENT BY AND BETWEEN SEARS, ROEBUCK AND CO .; ALLIED STORES GENERAL REAL ESTATE COMPANY; MAAS, INC .: BURDINE'S REAL ESTATE, INC .; J.C. PENNEY COMPANY, INC .; MERVYN'S; AND WEST DADE COUNTY ASSOCIATES, RECORDED OCTOBER 22, 1991 IN OFFICIAL RECORDS BOOK 15238, PAGE 2289; AND BY SECOND AMENDMENT TO EASEMENT AND OPERATING AGREEMENT BY AND BETWEEN SERITAGE SRC FINANCE LLC; MACY'S FLORIDA STORES, LLC; J.C. PENNEY CORPORATION, INC .; KOHL'S DEPARTMENT STORES, INC .; AND WEST DADE COUNTY ASSOCIATES RECORDED AUGUST 30, 2017 IN OFFICIAL RECORDS BOOK 30674, PAGE 1502; AND BY THIRD AMENDMENT TO EASEMENT AND OPERATING AGREEMENT BY AND BETWEEN SERITAGE SRC FINANCE LLC; MACY'S FLORIDA STORES, LLC; J.C. PENNEY CORPORATION, INC .; KOHL'S DEPARTMENT STORES, INC .; AND WEST DADE COUNTY ASSOCIATES RECORDED NOVEMBER 9, 2017 IN OFFICIAL RECORDS BOOK 30752, PAGE 434; AND BY FOURTH AMENDMENT TO EASEMENT AND OPERATING AGREEMENT RECORDED DECEMBER 8, 2017 IN OFFICIAL RECORDS BOOK 30785, PAGE 3451; AND BY FIFTH AMENDMENT TO EASEMENT AND OPERATING AGREEMENT BY AND BETWEEN SERITAGE SRC FINANCE LLC; MACY'S FLORIDA STORES, LLC; J.C. PENNEY CORPORATION, INC .; KOHL'S DEPARTMENT STORES, INC .; AND WEST DADE COUNTY ASSOCIATES RECORDED JUNE 21, 2018 IN OFFICIAL RECORDS BOOK 31023, PAGE 4347, PUBLIC RECORDS OF MIAMI-DADE COUNTY, FLORIDA.

TOGETHER WITH

PARCEL K1

A PORTION OF TRACT "A", MIAMI INTERNATIONAL MALL PROPERTIES ACCORDING TO THE PLAT THEREOF, AS RECORDED IN PLAT BOOK 117, PAGE 84, OF THE PUBLIC RECORDS OF MIAMI-DADE COUNTY, AND BEING MORE PARTICULARLY DESCRIBED AS FOLLOWS.

BEGINNING AT A PIPE IN CONCRETE MARKING THE SOUTHWEST CORNER OF SAID SECTION 32, THENCE N 1° 43' 13" W, ALONG THE WEST LINE OF SAID SECTION 32, A DISTANCE OF 2644.15 FEET TO A POINT; THENCE N 89° 38' 52" E, A DISTANCE OF 1502.00 FEET TO THE POINT OF BEGINNING OF THE FOLLOWING DESCRIBED PARCEL OF LAND; THENCE CONTINUE, N 89° 38' 52" E, A DISTANCE OF 215.66 FEET; THENCE, S 45° 00' 00" W, A DISTANCE OF 53.79 FEET TO A POINT; THENCE, S 45° 00' 00" E, A DISTANCE OF 110.32 FEET TO A POINT; THENCE, S 45° 00' 00" W, A DISTANCE OF 1.42 FEET TO A NON-TANGENT POINT; SAID POINT BEARS OF N 45° 00' 00" E FROM RADIUS POINT OF THE FOLLOWING DESCRIBED CIRCULAR CURVE CONCAVE TO THE SOUTHWEST AND HAVING A RADIUS OF 350.00 FEET; THENCE ALONG SAID CURVE TO THE LEFT FOR AN ARC DISTANCE OF 274.89 FEET THROUGH A CENTRAL ANGLE OF 45°00'00" TO A POINT OF TANGENCY; THENCE, N 90° 00' 00" W, FOR A DISTANCE OF 7.05 FEET TO A POINT (THE LAST TWO COURSES BEING CONCIDENT WITH THE OUTER EDGE OF PERMANENT ACCESS EASEMENT, AS RECORDED IN OFFICIAL RECORD BOOK 11411, AT PAGE 1044, OF THE PUBLIC RECORDS OF MIAMI-DADE COUNTY); THENCE, N 00° 21' 08" W, FOR A DISTANCE OF 13.20 FEET TO THE POINT OF BEGINNING.

TOGETHER WITH

PARCEL K2

A PORTION OF TRACT "A", MIAMI INTERNATIONAL MALL PROPERTIES ACCORDING TO THE PLAT THEREOF, AS RECORDED IN PLAT BOOK 117, PAGE 84, OF THE PUBLIC RECORDS OF MIAMI-DADE COUNTY, AND BEING MORE PARTICULARLY DESCRIBED AS FOLLOWS.

BEGINNING AT A PIPE IN CONCRETE MARKING THE SOUTHWEST CORNER OF SAID SECTION 32, THENCE N 1° 43' 13" W, ALONG THE WEST LINE OF SAID SECTION 32, A DISTANCE OF 2644.15 FEET TO A POINT; THENCE N 89° 38' 52" E, A DISTANCE OF 1717.66 FEET TO A POINT (ALSO KNOWN AS PRINCIPAL POINT); THENCE CONTINUE, N 89° 38' 52" E, A DISTANCE OF 532.59 FEET TO A POINT; THENCE, S 01° 43' 13" E, A DISTANCE OF 476.94 FEET TO THE POINT OF BEGINNING OF THE FOLLOWING DESCRIBED PARCEL OF LAND; THENCE CONTINUE, S 01° 43' 13" E, A DISTANCE OF 284.52 FEET TO A POINT; THENCE, S 88° 16' 47" W, A DISTANCE OF 10.00 FEET TO A POINT OF NON-TANGENT; SAID POINT BEARS OF N 88° 16' 47" E FROM RADIUS POINT OF THE FOLLOWING DESCRIBED CIRCULAR CURVE CONCAVE TO THE SOTHWEST AND HAVING A RADIUS OF 350.00 FEET; THENCE ALONG SAID CURVE TO THE LEFT FOR AN ARC DISTANCE OF 224.62 FEET THROUGH A CENTRAL ANGLE OF 36°46'17" TO A POINT (THE LAST COURSE BEING COINCIDENT WITH THE OUTER EDGE OF PERMANENT ACCESS EASEMENT, AS RECORDED ON SAID OFFICIAL RECORD BOOK 11411, AT PAGE 1044); THENCE, N 45°00'00" E, A DISTANCE OF 109.39 FEET TO THE POINT OF BEGINNING.

TOGETHER WITH

PARCEL K3

A PORTION OF TRACT "A", MIAMI INTERNATIONAL MALL PROPERTIES, ACCORDING TO THE PLAT THEREOF, AS RECORDED IN PLAT BOOK 117 AT PAGE 84 OF THE PUBLIC RECORDS OF MIAMI-DADE COUNTY FLORIDA AND BEING MORE PARTICULARLY DESCRIBED AS FOLLOWS:

COMMENCE AT THE MOST NORTHWESTERLY CORNER OF PARCEL IV, AS DESCRIBED IN OFFICIAL RECORDS BOOK 11411 AT PAGE 1044 OF THE PUBLIC RECORDS OF MIAMI-DADE COUNTY FLORIDA; THENCE RUN SOUTH 45 DEGREES 00 MINUTES 00 SECONDS EAST, ALONG THE SOUTHWESTERLY BOUNDARY LINE OF SAID PARCEL IV, FOR A DISTANCE OF 110.32 FEET TO THE POINT OF BEGINNING OF THE FOLLOWING PARCEL OF LAND; THENCE CONTINUE SOUTH 45 DEGREES 00 MINUTES 00 SECONDS EAST, ALONG SAID SOUTHWESTERLY BOUNDARY LINE OF SAID PARCEL IV, FOR A DISTANCE OF 611.18 FEET; THENCE SOUTH 45 DEGREES 00 MINUTES 00 SECONDS WEST, ALONG THE SOUTHWESTERLY EXTENSION OF THE SOUTHEASTERLY BOUNDARY LINE OF SAID PARCEL IV, FOR A DISTANCE OF 3.67 FEET TO A POINT; SAID POINT BEARS A BEARING OF NORTH 51 DEGREES 30 MINUTES 30 SECONDS EAST FROM THE RADIUS POINT OF THE FOLLOWING DESCRIBED CIRCULAR CURVE CONCAVE TO THE SOUTHWEST, HAVING A RADIUS OF 350.00 FEET AND A CENTRAL ANGLES OF 6 DEGREES 30 MINUTES 29 SECONDS FOR AN ARC DISTANCE OF 39.76 FEET TO A POINT OF TANGENCY; THENCE NORTH 45 DEGREES 00 MINUTES 00 SECONDS WEST FOR A DISTANCE OF 571.51 FEET (LAST MENTIONED TWO COURSE BEING ALONG THE NORTHEASTERLY BOUNDARY LINE OF PERMANENT ACCESS EASEMENT, AS DESCRIBED IN OFFICIAL RECORD BOOK 11411 AT PAGE 1044 OF THE PUBLIC RECORDS OF MIAMI-DADE COUNTY FLORIDA); THENCE NORTH 45 DEGREES 00 MINUTES 00 SECONDS EAST FOR A DISTANCE OF 1.42 FEET TO THE POINT OF BEGINNING.

TOGETHER WITH

PARCEL K4

A PORTION OF TRACT "A", MIAMI INTERNATIONAL MALL PROPERTIES ACCORDING TO THE PLAT THEREOF, AS RECORDED IN PLAT BOOK 117, PAGE 84, OF THE PUBLIC RECORDS OF MIAMI-DADE COUNTY, AND BEING MORE PARTICULARLY DESCRIBED AS FOLLOWS.

COMMENCE AT THE NORTHWEST CORNER OF THE SOUTHWEST 1/4 OF SECTION 32 TOWNSHIP 53 SOUTH, RANGE 40 EAST, AS SHOWN ON SAID PLAT OF MIAMI INTERNATIONAL MALL PROPERTIES; THENCE RUN, N 89° 38' 52" E, ALONG THE NORTH LINE OF SAID SECTION 32, A DISTANCE OF 1055.97 TO THE POINT OF BEGINNING OF THE FOLLOWING DESCRIBED PARCEL OF LAND; THENCE CONTINUE, N 89° 38' 52" E, ALONG THE NORTH LINE OF SAID SECTION 32, A DISTANCE OF 446.03 TO A POINT; THENCE, S 00°21'08"E, A DISTANCE OF 13.20 FEET TO A POINT; THENCE, N 90° 00' 00" W, FOR A DISTANCE OF 272.95 FEET TO A POINT OF CURVATURE OF A CIRCULAR CURVE TO THE LEFT, CONCAVE TO THE SOUTHEAST HAVING A RADIUS OF 375.00 FEET THROUGH A CENTRAL ANGLE OF 44°59'58" FOR AN ARC OF 294.52 FEET TO A POINT OF TANGENCY; THENCE, S45°00'00"W, A DISTANCE OF 388.46 FEET (THE LAST MENTIONED THREE COURSES BEING ALONG THE NORTHEASTERLY BOUNDARY LINE OF PERMANENT ACCESS EASEMENT, AS DESCRIBED IN OFFICIAL RECORD BOOK 11411 AT PAGE 1044 OF THE PUBLIC RECORDS OF MIAMI-DADE COUNTY FLORIDA); THENCE, N45°00'00"W, A DISTANCE OF 20.00 FEET; THENCE, N45°00'00"E, A DISTANCE OF 538.58 FEET TO THE POINT OF BEGINNING (LAST MENTIONED COURSE BEING ALONG THE SOUTHEASTERLY BOUNDARY LINE OF PARCEL VI-E AND ITS SOUTHWESTERLY EXTENSION, AS DESCRIBED IN OFFICIAL RECORD BOOK 11638, AT PAGE 1229 OF THE PUBLIC RECORDS OF MIAMI-DADE COUNTY FLORIDA).

TOGETHER WITH

PARCEL K5

A PORTION OF TRACT "A", MIAMI INTERNATIONAL MALL PROPERTIES ACCORDING TO THE PLAT THEREOF, AS RECORDED IN PLAT BOOK 117, PAGE 84, OF THE PUBLIC RECORDS OF MIAMI-DADE COUNTY, AND BEING MORE PARTICULARLY DESCRIBED AS FOLLOWS.

COMMENCE AT THE NORTHEAST CORNER OF SAID TRACT "A", AS SHOWN ON SAID PLAT OF MIAMI INTERNATIONAL MALL PROPERTIES; THENCE RUN, S01°43'13"E, ALONG THE EASTERLY LINE OF SAID TRACT "A", A DISTANCE OF 761.46 FEET TO THE POINT OF BEGINNING OF THE FOLLOWING DESCRIBED PARCEL OF LAND; THENCE CONTINUE, S01°43'13"E, ALONG THE EASTERLY LINE OF SAID TRACT "A", A DISTANCE OF 458.78 FEET TO A POINT; THENCE, S88°16'47"W, A DISTANCE OF 10.00 FEET TO A POINT; THENCE, N01°43'13"W, ALONG THE EASTERLY BOUNDARY LINE OF PERMANENT ACCESS EASEMENT, AS DESCRIBED IN OFFICIAL RECORD BOOK 11411 AT PAGE 1044 OF THE PUBLIC RECORDS OF MIAMI-DADE COUNTY FLORIDA, A DISTANCE 458.78 FEET TO A POINT; THENCE, N88°16'47"E, A DISTANCE OF 10.00 FEET TO THE POINT OF BEGINNING.

TOGETHER WITH

A PORTION OF ACCESS EASEMENT (RING ROAD)

A PORTION OF PERMANENT ACCESS EASEMENT, AS SHOWN IN OFFICIAL RECORD BOOK 11411, AT PAGE 1044 OF THE PUBLIC RECORDS OF MIAMI-DADE COUNTY, BOUNDED ON THE WEST BY A LINE PERPENDICULAR TO AND 29.00 FEET NORTHEASTERLY FROM THE MOST WESTERLY CORNER OF SEARS SITE (SAID DISTANCE BEING ALONG THE SOUTHEASTERLY LINE OF PERMANENT ACCESS EASEMENT) AND BOUNDED ON THE EAST BY A PERPENDICULAR LINE TO SAID PERMANENT ACCESS EASEMENT AT THE MOST SOUTHEASTERLY CORNER OF SAID JC PENNY SITE.

SURVEYOR'S CERTIFICATION:

I HEREBY CERTIFY THAT THIS "BOUNDARY SURVEY" OF THE PROPERTY DESCRIBED HEREON IS TRUE AND CORRECT TO THE BEST OF MY KNOWLEDGE AND BELIEF AS RECENTLY SURVEYED AND DRAWN UNDER MY SUPERVISION AND DIRECTION. THIS SURVEY COMPLIES WITH STANDARDS OF PRACTICE REQUIREMENTS ADOPTED BY THE FLORIDA STATE BOARD OF SURVEYORS AND MAPPERS PURSUANT TO CHAPTER 5J-17, FLORIDA ADMINISTRATIVE CODE.

THIS CERTIFICATION DOES NOT EXTEND TO ANY UNNAMED PARTIES.

BY:______________
JOSE G. HERNANDEZ, PRESIDENT
PROFESSIONAL LAND SURVEYOR No. 6952
STATE OF FLORIDA.

THE ELECTRONIC SEAL AND SIGNATURE APPEARING ON THIS SURVEY WAS AUTHORIZED BY JOSE G. HERNANDEZ, PROFESSIONAL LAND SURVEYOR NO. 6952 OF THE STATE OF FLORIDA ON MARCH 24, 2026.

THIS IS A BOUNDARY SURVEY
PROJECT NUMBER: MD-746

BOUNDARY SURVEY

FIELD SURVEY WAS COMPLETED ON: APRIL 29, 2025 AND UPDATED ON SEPTEMBER 23, 2025.

LEGEND AND ABBREVIATIONS

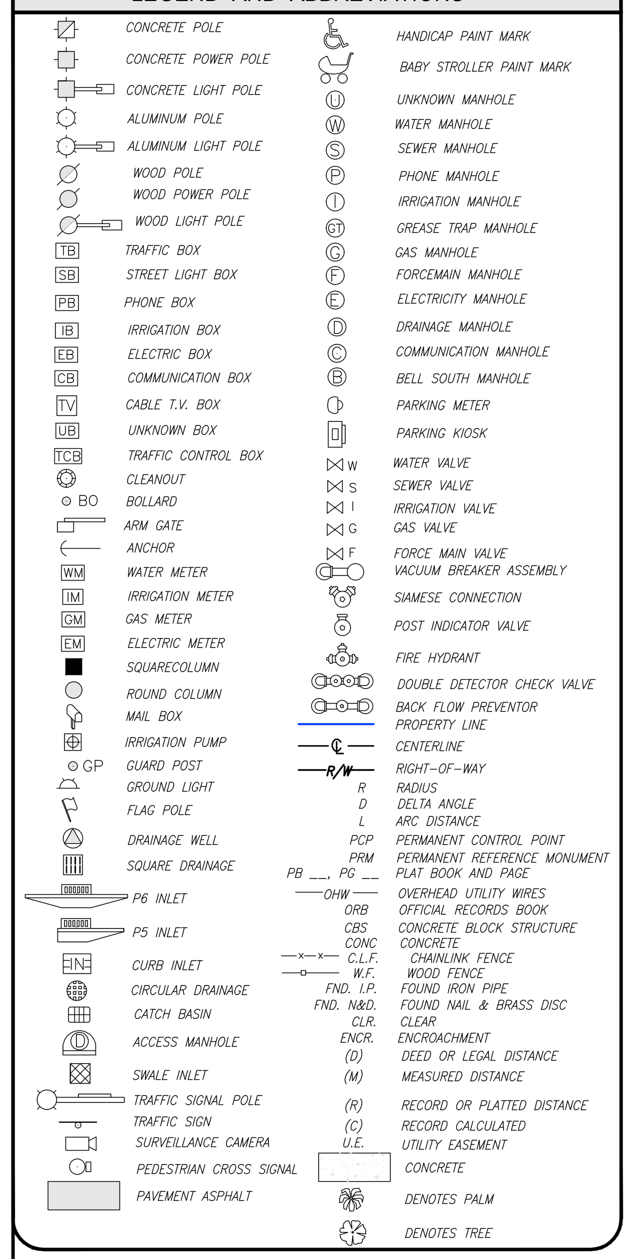

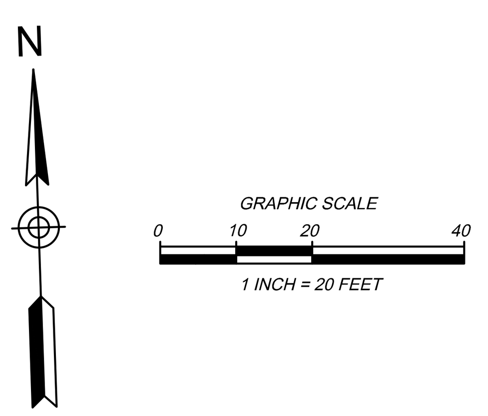

SKETCH OF LEGAL DESCRIPTION

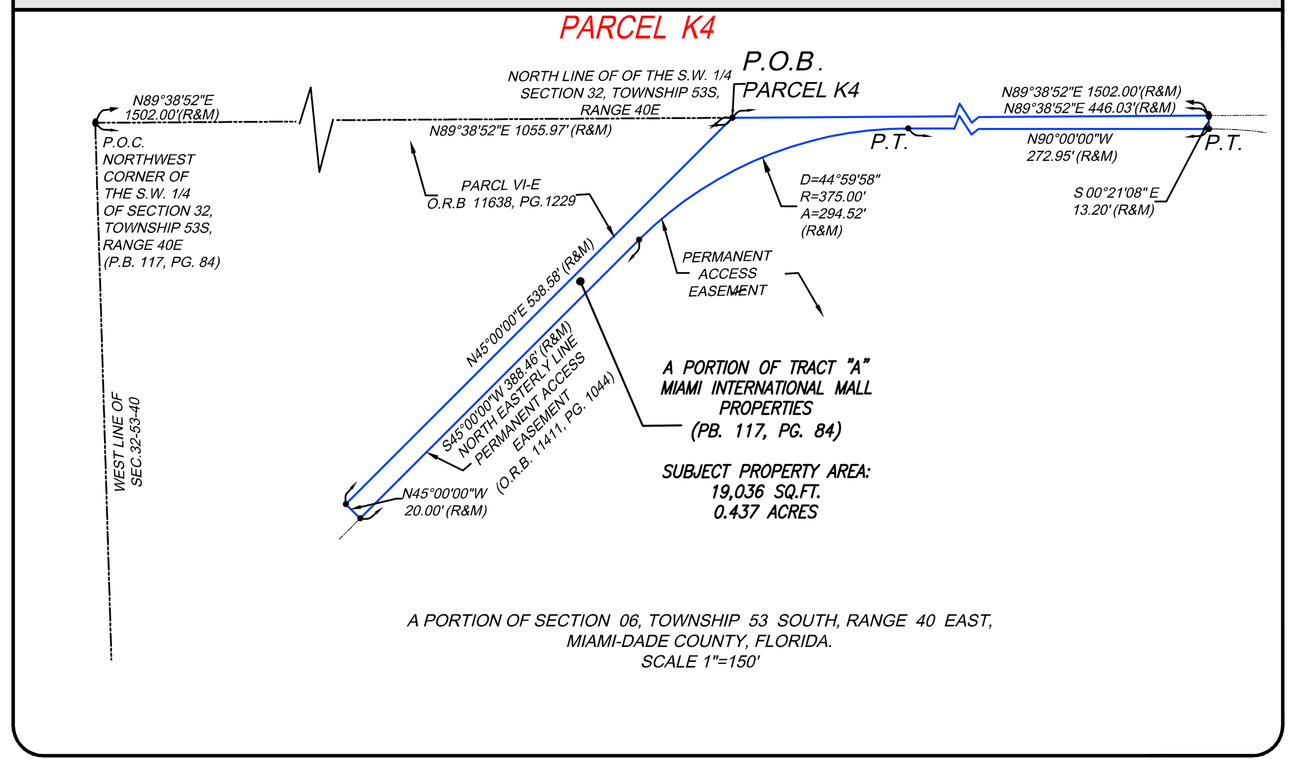

SKETCH OF LEGAL DESCRIPTION

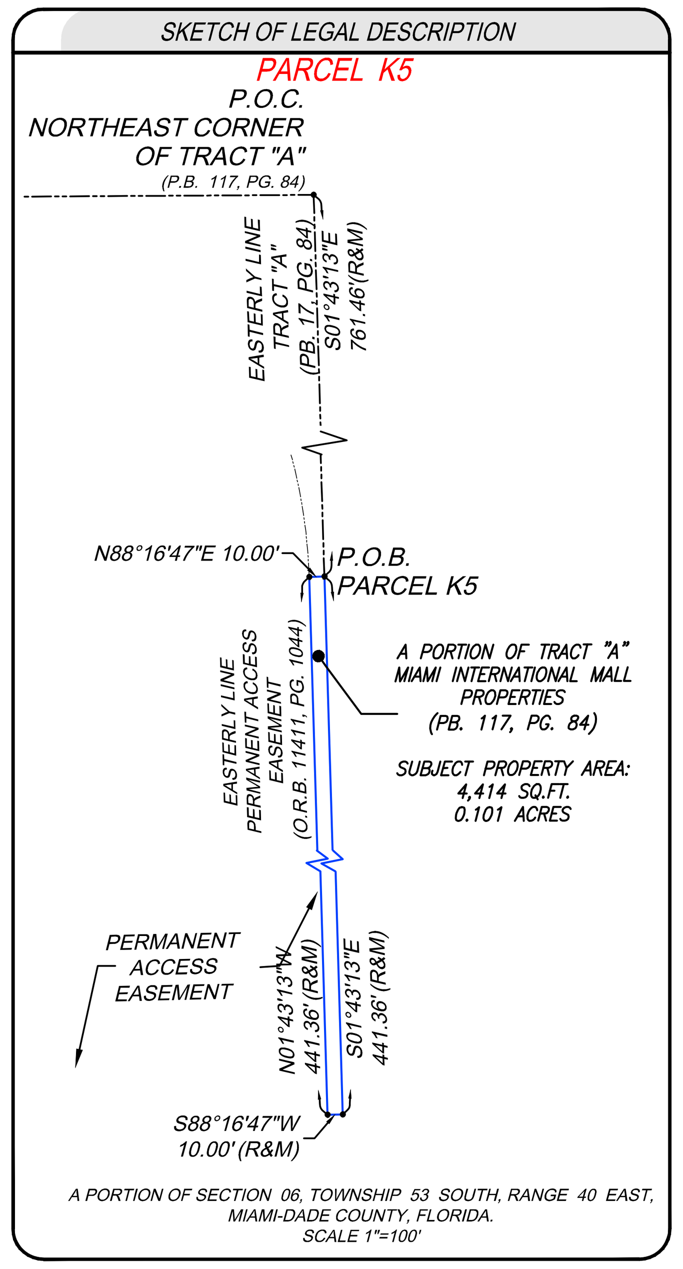

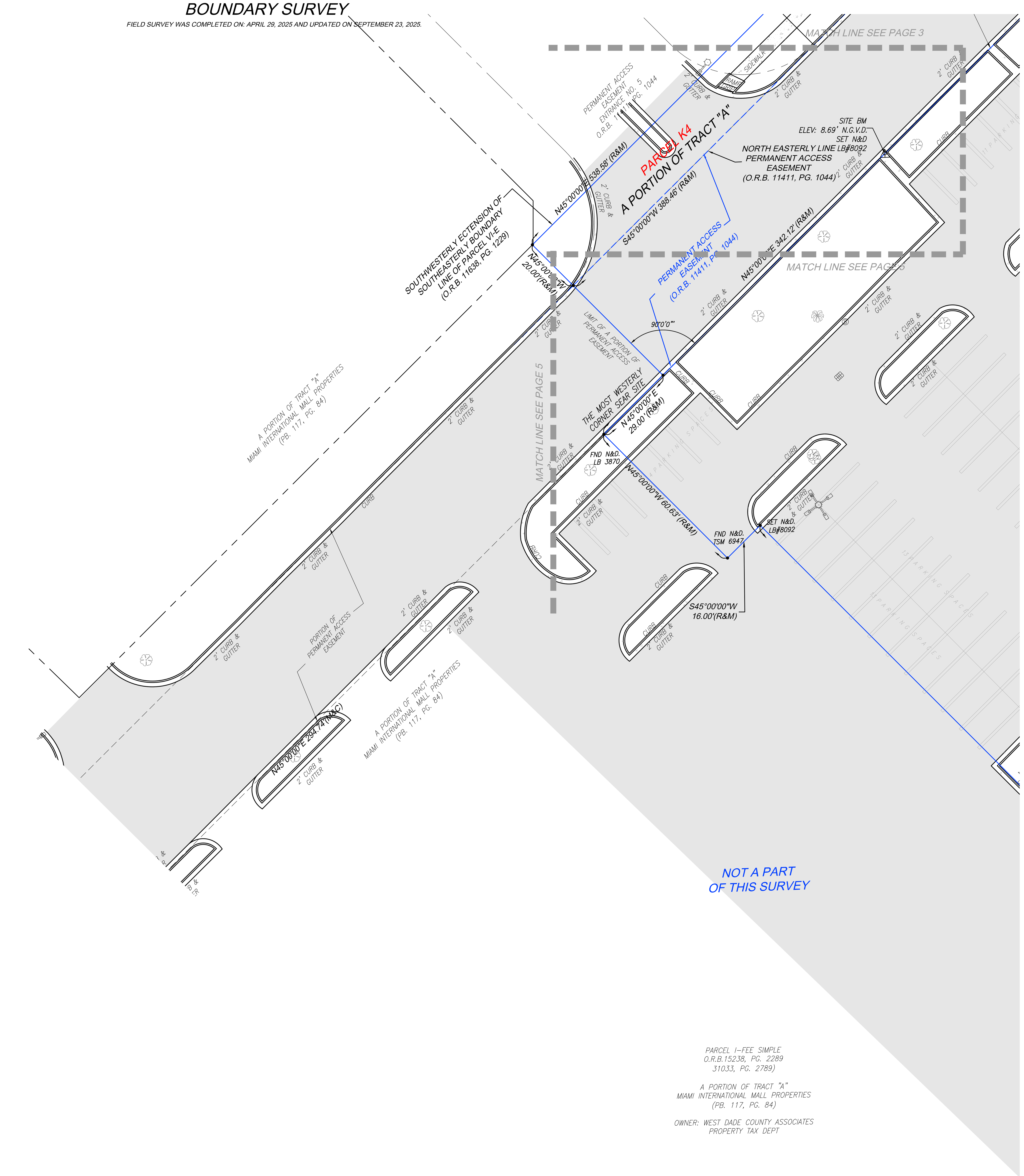

SURVEYOR'S NOTES

1. FIELD SURVEY WAS COMPLETED ON: APRIL 29, 2025 AND UPDATED ON SEPTEMBER 22, 2025.
2. LEGAL DESCRIPTION WAS PROVIDED BY THE CLIENT
3. SUBJECT PROPERTY AREA:
   SEARS SITE: 565,951 sq.ft. (12.992 Acres)
   PARCEL #1 - JC PENNY SITE : 419,055 sq.ft. (9.620 Acres)
   PARCEL K1: 6,276 sq.ft (0.144 Acres)
   PARCEL K2: 9.734 sq.ft (0.223 Acres)
   PARCEL K3: 897 SQ.FT. (0.021 ACRES)
   PARCEL K4: 19,036 SQ.FT. (0.437 ACRES)
   PARCEL K5: 4,414 SQ.FT. (0.101 ACRES)
   A PORTION OF PERMANENT ACCESS EASEMENT: 90,340 SQ.FT. (2.074 ACRES)
4. BEARINGS BASED ON AN ASSUMED BEARING OF EAST ALONG THE NORTH LINE OF SUBJECT PROPERTY SITE #1.
5. DISTANCES ALONG BOUNDARY LINES, AS SHOWN HEREON, ARE RECORD AND/OR MEASURED UNLESS OTHERWISE NOTED.
6. INTERIOR LOT LINES, AS SHOWN HEREON, ARE FOR INFORMATIONAL PURPOSE ONLY, UNLESS OTHERWISE NOTED.
7. UNDERGROUND FOOTINGS, FOUNDATIONS AND HAVE NOT BEEN LOCATED AT THE TIME OF THIS SURVEY, UNLESS OTHERWISE NOTED.
8. ABOVEGROUND AND/OR VISIBLE UTILITIES HAVE BEEN LOCATED AT THE TIME OF THIS SURVEY, UNLESS OTHERWISE NOTED.
9. SUBJECT PROPERTY HAS A DIRECT PHYSICAL ACCESS TO AND FROM PERMANENT ACCESS EASEMENT.
10. THE SURVEYOR DOES NOT DETERMINE FENCE AND/OR WALL OWNERSHIP.
11. THERE IS A GAP BETWEEN SEARS SITE AND PERMANENT ACCESS EASEMENT.
12. THIS BOUNDARY SURVEY IS SUBJECT TO EASEMENTS, RIGHTS-OF-WAY AND OTHER MATTERS THAT MIGHT BE REFLECTED ON A SEARCH OF TITLE OF THE SUBJECT PROPERTY.

PROPERTY INFORMATION

SEARS SITE

- PROPERTY ADDRESS: 1625 NW 107th AVE CITY OF DORAL , MIAMI-DADE, FL 33172
- PARCEL ID : 35-3032-008-0050

JC PENNY SITE

- PROPERTY ADDRESS: 1603 NW 107th AVE CITY OF DORAL , MIAMI-DADE, FL 33172
- PARCEL ID : 35-3032-008-0140

CERTIFY TO:

- GREYSTAR DEVELOPMENT EAST, LLC, A DELAWARE LIMITED LIABILITY COMPANY
- FIRST AMERICAN TITLE INSURANCE COMPANY
- GREENBERG TRAURIG, PA

POSSIBLE ENCROACHMENTS

- PARCEL K3 - POSSIBLE ENCROACHMENTS
- A PORTION OF CHAIN LINK FENCE , ALONG THE EAST BOUNDARY LINE , ENCROACH 0.7 ' FROM ADJOINING LAND ONTO SUBJECT PROPERTY . (SEE PAGE 13)
- A PORTION OF TEMPORARY CHAIN LINK FENCE , ALONG THE SOUTHWESTERLY BOUNDARY LINE, ENCROACH 1.7 ' FROM SUBJECT PROPERTY ONTO PERMANENT ACCESS EASEMENT. (SEE PAGE 12)

REVISIONS

DATE	JOB No.	REV.	BY:
05/27/25	155116	UPDATE TITLE OF COMMITMENT	C.A.F.
09/23/25	155443-5	UPDATE BOUNDARY SURVEY	C.A.F.
06/11/25	155443-5	UPDATE BOUNDARY SURVEY	C.A.F.

BOUNDARY SURVEY

PREPARED FOR:

GREYSTAR DEVELOPMENT EAST, LLC

LYING AND BEING IN SECTION 32, TOWNSHIP 53 SOUTH, RANGE 40 EAST CITY OF DORAL, MIAMI-DADE COUNTY, FLORIDA.

J.Hernandez & Associates Inc
LAND SURVEYORS AND MAPPERS
CERTIFICATE OF AUTHORIZATION No. LB8092
3300 NW 112th AVE. SUITE #10, DORAL, FL 33172
(P) 305-526-0606 (E) info@jhasurveys.com

DRAWN BY: C.A.F. DATE: 05/01/2025	CHECKED BY: J.G.H. DATE: 05/01/2025	JOB NUM: 155116 F.B.: MD-80, PG. 30

LEGAL DESCRIPTION

SEARS SITE

A PARCEL OF LAND LOCATED WITHIN SECTION 32, TOWNSHIP 53 SOUTH, RANGE 40 EAST, LYING AND BEING IN DADE COUNTY, FLORIDA AND FURTHER BOUNDED AND DESCRIBED AS FOLLOWS:

BEGINNING AT A PIPE IN CONCRETE MARKING THE SOUTHWEST CORNER OF SAID SECTION 32, THENCE N 1° 43' 13" W, ALONG THE WEST LINE OF SAID SECTION 32, A DISTANCE OF 2644.15 FEET TO A POINT; THENCE N 89° 38' 52" E, A DISTANCE OF 1228.85 FEET TO A POINT; THENCE S 0° 21' 08" E, A DISTANCE OF 46.51 FEET TO THE PRINCIPAL POINT AND PLACE OF BEGINNING OF THE FOLLOWING DESCRIPTION:

THENCE DUE EAST, A DISTANCE OF 280.00 FEET TO A POINT; THENCE 247.40 FEET ALONG AN ARC TO THE RIGHT, HAVING A RADIUS OF 315.00 FEET AND A CHORD OF 241.09 FEET, BEARING S 67° 30' 00" E TO A POINT; THENCE S 45° 00' 00" E, A DISTANCE OF 297.19 FEET TO A POINT; THENCE S 45° 00' 00" W, A DISTANCE OF 426.52 FEET TO A POINT; THENCE DUE WEST, A DISTANCE OF 472.87 FEET TO A POINT; THENCE S 45° 00' 00" W, A DISTANCE OF 171.25 FEET TO A POINT; THENCE N 45° 00' 00" W, A DISTANCE OF 413.50 FEET TO A POINT; THENCE S 45° 00' 00" W, A DISTANCE OF 16.00 FEET TO A POINT; THENCE N 45° 00' 00" W, A DISTANCE OF 60.63 FEET TO A POINT; THENCE N 45° 00' 00" E, A DISTANCE OF 342.12 FEET TO A POINT; THENCE N 38° 11' 22.8" E, A DISTANCE OF 75.89 FEET TO A POINT; THENCE 267.04 FEET ALONG AN ARC TO THE RIGHT, HAVING A RADIUS OF 340.00 FEET AND A CHORD OF 260.22 FEET, BEARING N 67° 30' 00" E TO THE PRINCIPAL POINT AND PLACE OF BEGINNING.

TOGETHER WITH

JC PENNY SITE
PARCEL 1

A PART OF TRACT A, MIAMI INTERNATIONAL MALL PROPERTIES, ACCORDING TO THE PLAT RECORDED IN PLAT BOOK 117, PAGE 84, PUBLIC RECORDS OF MIAMI-DADE COUNTY, FLORIDA, AND FURTHER BOUNDED AND DESCRIBED AS FOLLOWS:

BEGINNING AT A PIPE IN CONCRETE MARKING THE SOUTHWEST COMER OF SAID SECTION 32, TOWNSHIP 53 SOUTH, RANGE 40 EAST; THENCE NORTH 89° 20' 55" EAST ALONG THE SOUTH LINE OF SECTION 32, A DISTANCE OF 2250.00 FEET TO A POINT; THENCE NORTH 01° 43' 13" WEST A DISTANCE OF 1149.03 FEET TO A POINT; THENCE SOUTH 88° 16' 47" WEST A DISTANCE OF 45.00 FEET TO A POINT; THENCE NORTH 01° 43' 13" WEST A DISTANCE OF 263.14 FEET TO A POINT, SAID POINT BEING THE PRINCIPAL POINT AND PLACE OF BEGINNING OF THE FOLLOWING DESCRIPTION: THENCE DUE WEST A DISTANCE OF 244.73 FEET TO A POINT; THENCE DUE NORTH A DISTANCE OF 102.00 FEET TO A POINT; THENCE DUE WEST A DISTANCE OF 432.00 FEET TO A POINT; THENCE DUE NORTH A DISTANCE OF 386.97 FEET TO A POINT; THENCE NORTH 45° 00' 00" EAST A DISTANCE OF 532.98 FEET TO A POINT; THENCE SOUTH 45° 00' 00" EASI A DISTANCE OF 274.31 FEET TO A POINT; THENCE 237.94 FEET ALONG AN ARC TO THE RIGHT, HAVING A RADIUS OF 315.00 FEET AND A CENTRAL ANGLE OF 43° 16' 47" TO A POINT; THENCE SOUTH 01°43' 13" EAST A DISTANCE OF 458.80 FEET TO A POINT, SAID POINT BEING THE PRINCIPAL POINT AND PLACE OF BEGINNING.

PARCEL 2

EASEMENT RIGHTS AS SET FORTH IN THE MIAMI INTERNATIONAL MALL EASEMENT AND OPERATING AGREEMENT BY AND AMONG SEARS, ROEBUCK AND CO .; ALSTORES REALTY CORPORATION; JORDAN MARSH COMPANY; FEDERATED DEPARTMENT STORES, INC .; ASSOCIATED DRY GOOD CORPORATION; AND WEST DADE COUNTY ASSOCIATES RECORDED APRIL 15, 1982 IN OFFICIAL RECORDS BOOK 11411, PAGE 1044: AS AFFECTED BY FIRST AMENDMENT TO EASEMENT AND OPERATING AGREEMENT BY AND BETWEEN SEARS, ROEBUCK AND CO .; ALLIED STORES GENERAL REAL ESTATE COMPANY; MAAS, INC .: BURDINE'S REAL ESTATE, INC .; J.C. PENNEY COMPANY, INC .; MERVYN'S; AND WEST DADE COUNTY ASSOCIATES, RECORDED OCTOBER 22, 1991 IN OFFICIAL RECORDS BOOK 15238, PAGE 2289; AND BY SECOND AMENDMENT TO EASEMENT AND OPERATING AGREEMENT BY AND BETWEEN SERITAGE SRC FINANCE LLC; MACY'S FLORIDA STORES, LLC; J.C. PENNEY CORPORATION, INC .; KOHL'S DEPARTMENT STORES, INC .; AND WEST DADE COUNTY ASSOCIATES RECORDED AUGUST 30, 2017 IN OFFICIAL RECORDS BOOK 30674, PAGE 1502; AND BY THIRD AMENDMENT TO EASEMENT AND OPERATING AGREEMENT BY AND BETWEEN SERITAGE SRC FINANCE LLC; MACY'S FLORIDA STORES, LLC; J.C. PENNEY CORPORATION, INC .; KOHL'S DEPARTMENT STORES, INC .; AND WEST DADE COUNTY ASSOCIATES RECORDED NOVEMBER 9, 2017 IN OFFICIAL RECORDS BOOK 30752, PAGE 434; AND BY FOURTH AMENDMENT TO EASEMENT AND OPERATING AGREEMENT RECORDED DECEMBER 8, 2017 IN OFFICIAL RECORDS BOOK 30785, PAGE 3451; AND BY FIFTH AMENDMENT TO EASEMENT AND OPERATING AGREEMENT BY AND BETWEEN SERITAGE SRC FINANCE LLC; MACY'S FLORIDA STORES, LLC; J.C. PENNEY CORPORATION, INC .; KOHL'S DEPARTMENT STORES, INC .; AND WEST DADE COUNTY ASSOCIATES RECORDED JUNE 21, 2018 IN OFFICIAL RECORDS BOOK 31023, PAGE 4347, PUBLIC RECORDS OF MIAMI-DADE COUNTY, FLORIDA.

TOGETHER WITH

PARCEL K1

A PORTION OF TRACT "A", MIAMI INTERNATIONAL MALL PROPERTIES ACCORDING TO THE PLAT THEREOF, AS RECORDED IN PLAT BOOK 117, PAGE 84, OF THE PUBLIC RECORDS OF MIAMI-DADE COUNTY, AND BEING MORE PARTICULARLY DESCRIBED AS FOLLOWS.

BEGINNING AT A PIPE IN CONCRETE MARKING THE SOUTHWEST CORNER OF SAID SECTION 32, THENCE N 1° 43' 13" W, ALONG THE WEST LINE OF SAID SECTION 32, A DISTANCE OF 2644.15 FEET TO A POINT; THENCE N 89° 38' 52" E, A DISTANCE OF 1502.00 FEET TO THE POINT OF BEGINNING OF THE FOLLOWING DESCRIBED PARCEL OF LAND; THENCE CONTINUE, N 89° 38' 52" E, A DISTANCE OF 215.66 FEET; THENCE, S 45° 00' 00" W, A DISTANCE OF 53.79 FEET TO A POINT; THENCE, S 45° 00' 00" E, A DISTANCE OF 110.32 FEET TO A POINT; THENCE, S 45° 00' 00" W, A DISTANCE OF 1.42 FEET TO A NON-TANGENT POINT; SAID POINT BEARS OF N 45° 00' 00" E FROM RADIUS POINT OF THE FOLLOWING DESCRIBED CIRCULAR CURVE CONCAVE TO THE SOUTHWEST AND HAVING A RADIUS OF 350.00 FEET; THENCE ALONG SAID CURVE TO THE LEFT FOR AN ARC DISTANCE OF 274.89 FEET THROUGH A CENTRAL ANGLE OF 45°00'00" TO A POINT OF TANGENCY; THENCE, N 90° 00' 00" W, FOR A DISTANCE OF 7.05 FEET TO A POINT (THE LAST TWO COURSES BEING CONCIDENT WITH THE OUTER EDGE OF PERMANENT ACCESS EASEMENT, AS RECORDED IN OFFICIAL RECORD BOOK 11411, AT PAGE 1044, OF THE PUBLIC RECORDS OF MIAMI-DADE COUNTY); THENCE, N 00° 21' 08" W, FOR A DISTANCE OF 13.20 FEET TO THE POINT OF BEGINNING.

TOGETHER WITH

PARCEL K2

A PORTION OF TRACT "A", MIAMI INTERNATIONAL MALL PROPERTIES ACCORDING TO THE PLAT THEREOF, AS RECORDED IN PLAT BOOK 117, PAGE 84, OF THE PUBLIC RECORDS OF MIAMI-DADE COUNTY, AND BEING MORE PARTICULARLY DESCRIBED AS FOLLOWS.

BEGINNING AT A PIPE IN CONCRETE MARKING THE SOUTHWEST CORNER OF SAID SECTION 32, THENCE N 1° 43' 13" W, ALONG THE WEST LINE OF SAID SECTION 32, A DISTANCE OF 2644.15 FEET TO A POINT; THENCE N 89° 38' 52" E, A DISTANCE OF 1717.66 FEET TO A POINT (ALSO KNOWN AS PRINCIPAL POINT); THENCE CONTINUE, N 89° 38' 52" E, A DISTANCE OF 532.59 FEET TO A POINT; THENCE, S 01° 43' 13" E, A DISTANCE OF 476.94 FEET TO THE POINT OF BEGINNING OF THE FOLLOWING DESCRIBED PARCEL OF LAND; THENCE CONTINUE, S 01° 43' 13" E, A DISTANCE OF 284.52 FEET TO A POINT; THENCE, S 88° 16' 47" W, A DISTANCE OF 10.00 FEET TO A POINT OF NON-TANGENT; SAID POINT BEARS OF N 88° 16' 47" E FROM RADIUS POINT OF THE FOLLOWING DESCRIBED CIRCULAR CURVE CONCAVE TO THE SOTHWEST AND HAVING A RADIUS OF 350.00 FEET; THENCE ALONG SAID CURVE TO THE LEFT FOR AN ARC DISTANCE OF 224.62 FEET THROUGH A CENTRAL ANGLE OF 36°46'17" TO A POINT (THE LAST COURSE BEING COINCIDENT WITH THE OUTER EDGE OF PERMANENT ACCESS EASEMENT, AS RECORDED ON SAID OFFICIAL RECORD BOOK 11411, AT PAGE 1044); THENCE, N 45°00'00" E, A DISTANCE OF 109.39 FEET TO THE POINT OF BEGINNING.

TOGETHER WITH

PARCEL K3

A PORTION OF TRACT "A", MIAMI INTERNATIONAL MALL PROPERTIES, ACCORDING TO THE PLAT THEREOF, AS RECORDED IN PLAT BOOK 117 AT PAGE 84 OF THE PUBLIC RECORDS OF MIAMI-DADE COUNTY FLORIDA AND BEING MORE PARTICULARLY DESCRIBED AS FOLLOWS:

COMMENCE AT THE MOST NORTHWESTERLY CORNER OF PARCEL IV, AS DESCRIBED IN OFFICIAL RECORDS BOOK 11411 AT PAGE 1044 OF THE PUBLIC RECORDS OF MIAMI-DADE COUNTY FLORIDA; THENCE RUN SOUTH 45 DEGREES 00 MINUTES 00 SECONDS EAST, ALONG THE SOUTHWESTERLY BOUNDARY LINE OF SAID PARCEL IV, FOR A DISTANCE OF 110.32 FEET TO THE POINT OF BEGINNING OF THE FOLLOWING PARCEL OF LAND; THENCE CONTINUE SOUTH 45 DEGREES 00 MINUTES 00 SECONDS EAST, ALONG SAID SOUTHWESTERLY BOUNDARY LINE OF SAID PARCEL IV, FOR A DISTANCE OF 611.18 FEET; THENCE SOUTH 45 DEGREES 00 MINUTES 00 SECONDS WEST, ALONG THE SOUTHWESTERLY EXTENSION OF THE SOUTHEASTERLY BOUNDARY LINE OF SAID PARCEL IV, FOR A DISTANCE OF 3.67 FEET TO A POINT; SAID POINT BEARS A BEARING OF NORTH 51 DEGREES 30 MINUTES 30 SECONDS EAST FROM THE RADIUS POINT OF THE FOLLOWING DESCRIBED CIRCULAR CURVE CONCAVE TO THE SOUTHWEST, HAVING A RADIUS OF 350.00 FEET AND A CENTRAL ANGLES OF 6 DEGREES 30 MINUTES 29 SECONDS FOR AN ARC DISTANCE OF 39.76 FEET TO A POINT OF TANGENCY; THENCE NORTH 45 DEGREES 00 MINUTES 00 SECONDS WEST FOR A DISTANCE OF 571.51 FEET (LAST MENTIONED TWO COURSE BEING ALONG THE NORTHEASTERLY BOUNDARY LINE OF PERMANENT ACCESS EASEMENT, AS DESCRIBED IN OFFICIAL RECORD BOOK 11411 AT PAGE 1044 OF THE PUBLIC RECORDS OF MIAMI-DADE COUNTY FLORIDA); THENCE NORTH 45 DEGREES 00 MINUTES 00 SECONDS EAST FOR A DISTANCE OF 1.42 FEET TO THE POINT OF BEGINNING.

TOGETHER WITH

PARCEL K4

A PORTION OF TRACT "A", MIAMI INTERNATIONAL MALL PROPERTIES ACCORDING TO THE PLAT THEREOF, AS RECORDED IN PLAT BOOK 117, PAGE 84, OF THE PUBLIC RECORDS OF MIAMI-DADE COUNTY, AND BEING MORE PARTICULARLY DESCRIBED AS FOLLOWS.

COMMENCE AT THE NORTHWEST CORNER OF THE SOUTHWEST 1/4 OF SECTION 32 TOWNSHIP 53 SOUTH, RANGE 40 EAST, AS SHOWN ON SAID PLAT OF MIAMI INTERNATIONAL MALL PROPERTIES; THENCE RUN, N 89° 38' 52" E, ALONG THE NORTH LINE OF SAID SECTION 32, A DISTANCE OF 1055.97 TO THE POINT OF BEGINNING OF THE FOLLOWING DESCRIBED PARCEL OF LAND; THENCE CONTINUE, N 89° 38' 52" E, ALONG THE NORTH LINE OF SAID SECTION 32, A DISTANCE OF 446.03 TO A POINT; THENCE, S 00°21'08"E, A DISTANCE OF 13.20 FEET TO A POINT; THENCE, N 90° 00' 00" W, FOR A DISTANCE OF 272.95 FEET TO A POINT OF CURVATURE OF A CIRCULAR CURVE TO THE LEFT, CONCAVE TO THE SOUTHEAST HAVING A RADIUS OF 375.00 FEET THROUGH A CENTRAL ANGLE OF 44°59'58" FOR AN ARC OF 294.52 FEET TO A POINT OF TANGENCY; THENCE, S45°00'00"W, A DISTANCE OF 388.46 FEET (THE LAST MENTIONED THREE COURSES BEING ALONG THE NORTHEASTERLY BOUNDARY LINE OF PERMANENT ACCESS EASEMENT, AS DESCRIBED IN OFFICIAL RECORD BOOK 11411 AT PAGE 1044 OF THE PUBLIC RECORDS OF MIAMI-DADE COUNTY FLORIDA); THENCE, N45°00'00"W, A DISTANCE OF 20.00 FEET; THENCE, N45°00'00"E, A DISTANCE OF 538.58 FEET TO THE POINT OF BEGINNING (LAST MENTIONED COURSE BEING ALONG THE SOUTHEASTERLY BOUNDARY LINE OF PARCEL VI-E AND ITS SOUTHWESTERLY EXTENSION, AS DESCRIBED IN OFFICIAL RECORD BOOK 11638, AT PAGE 1229 OF THE PUBLIC RECORDS OF MIAMI-DADE COUNTY FLORIDA).

TOGETHER WITH

PARCEL K5

A PORTION OF TRACT "A", MIAMI INTERNATIONAL MALL PROPERTIES ACCORDING TO THE PLAT THEREOF, AS RECORDED IN PLAT BOOK 117, PAGE 84, OF THE PUBLIC RECORDS OF MIAMI-DADE COUNTY, AND BEING MORE PARTICULARLY DESCRIBED AS FOLLOWS.

COMMENCE AT THE NORTHEAST CORNER OF SAID TRACT "A", AS SHOWN ON SAID PLAT OF MIAMI INTERNATIONAL MALL PROPERTIES; THENCE RUN, S01°43'13"E, ALONG THE EASTERLY LINE OF SAID TRACT "A", A DISTANCE OF 761.46 FEET TO THE POINT OF BEGINNING OF THE FOLLOWING DESCRIBED PARCEL OF LAND; THENCE CONTINUE, S01°43'13"E, ALONG THE EASTERLY LINE OF SAID TRACT "A", A DISTANCE OF 458.78 FEET TO A POINT; THENCE, S88°16'47"W, A DISTANCE OF 10.00 FEET TO A POINT; THENCE, N01°43'13"W, ALONG THE EASTERLY BOUNDARY LINE OF PERMANENT ACCESS EASEMENT, AS DESCRIBED IN OFFICIAL RECORD BOOK 11411 AT PAGE 1044 OF THE PUBLIC RECORDS OF MIAMI-DADE COUNTY FLORIDA, A DISTANCE 458.78 FEET TO A POINT; THENCE, N88°16'47"E, A DISTANCE OF 10.00 FEET TO THE POINT OF BEGINNING.

TOGETHER WITH

A PORTION OF ACCESS EASEMENT (RING ROAD)

A PORTION OF PERMANENT ACCESS EASEMENT, AS SHOWN IN OFFICIAL RECORD BOOK 11411, AT PAGE 1044 OF THE PUBLIC RECORDS OF MIAMI-DADE COUNTY, BOUNDED ON THE WEST BY A LINE PERPENDICULAR TO AND 29.00 FEET NORTHEASTERLY FROM THE MOST WESTERLY CORNER OF SEARS SITE (SAID DISTANCE BEING ALONG THE SOUTHEASTERLY LINE OF PERMANENT ACCESS EASEMENT) AND BOUNDED ON THE EAST BY A PERPENDICULAR LINE TO SAID PERMANENT ACCESS EASEMENT AT THE MOST SOUTHEASTERLY CORNER OF SAID JC PENNY SITE.

SURVEYOR'S CERTIFICATION:

I HEREBY CERTIFY THAT THIS "BOUNDARY SURVEY" OF THE PROPERTY DESCRIBED HEREON IS TRUE AND CORRECT TO THE BEST OF MY KNOWLEDGE AND BELIEF AS RECENTLY SURVEYED AND DRAWN UNDER MY SUPERVISION AND DIRECTION. THIS SURVEY COMPLIES WITH STANDARDS OF PRACTICE REQUIREMENTS ADOPTED BY THE FLORIDA STATE BOARD OF SURVEYORS AND MAPPERS PURSUANT TO CHAPTER 5J-17, FLORIDA ADMINISTRATIVE CODE.

THIS CERTIFICATION DOES NOT EXTEND TO ANY UNNAMED PARTIES.

BY:________________
JOSE G. HERNANDEZ, PRESIDENT
PROFESSIONAL LAND SURVEYOR No. 6952
STATE OF FLORIDA.

THE ELECTRONIC SEAL AND SIGNATURE APPEARING ON THIS SURVEY WAS AUTHORIZED BY JOSE G. HERNANDEZ, PROFESSIONAL LAND SURVEYOR NO. 6952 OF THE STATE OF FLORIDA ON MARCH 24, 2026.

THIS IS A BOUNDARY SURVEY
PROJECT NUMBER: MD-730
SHEET NUMBER: 2 OF 13

BOUNDARY SURVEY

FIELD SURVEY WAS COMPLETED ON: APRIL 29, 2025 AND UPDATED ON SEPTEMBER 23, 2025.

LEGEND AND ABBREVIATIONS

CONCRETE POLE; CONCRETE POWER POLE; CONCRETE LIGHT POLE; ALUMINUM POLE; ALUMINUM LIGHT POLE; WOOD POLE; WOOD POWER POLE; WOOD LIGHT POLE; TRAFFIC BOX; STREET LIGHT BOX; PHONE BOX; IRRIGATION BOX; ELECTRIC BOX; COMMUNICATION BOX; CABLE T.V. BOX; UNKNOWN BOX; TRAFFIC CONTROL BOX; CLEANOUT; BOLLARD; ARM GATE; ANCHOR; WATER METER; IRRIGATION METER; GAS METER; ELECTRIC METER; SQUARECOLUMN; ROUND COLUMN; MAIL BOX; IRRIGATION PUMP; GUARD POST; GROUND LIGHT; FLAG POLE; DRAINAGE WELL; SQUARE DRAINAGE; P6 INLET; P5 INLET; CURB INLET; CIRCULAR DRAINAGE; CATCH BASIN; ACCESS MANHOLE; SWALE INLET; TRAFFIC SIGNAL POLE; TRAFFIC SIGN; SURVEILLANCE CAMERA; PEDESTRIAN CROSS SIGNAL; PAVEMENT ASPHALT

HANDICAP PAINT MARK; BABY STROLLER PAINT MARK; UNKNOWN MANHOLE; WATER MANHOLE; SEWER MANHOLE; PHONE MANHOLE; IRRIGATION MANHOLE; GREASE TRAP MANHOLE; GAS MANHOLE; FORCEMAIN MANHOLE; ELECTRICITY MANHOLE; DRAINAGE MANHOLE; COMMUNICATION MANHOLE; BELL SOUTH MANHOLE; PARKING METER; PARKING KIOSK; WATER VALVE; SEWER VALVE; IRRIGATION VALVE; GAS VALVE; FORCE MAIN VALVE; VACUUM BREAKER ASSEMBLY; SIAMESE CONNECTION; POST INDICATOR VALVE; FIRE HYDRANT; DOUBLE DETECTOR CHECK VALVE; BACK FLOW PREVENTOR; PROPERTY LINE; CENTERLINE; RIGHT-OF-WAY

R RADIUS; Δ DELTA ANGLE; L ARC DISTANCE; PCP PERMANENT CONTROL POINT; PRM PERMANENT REFERENCE MONUMENT; PB PG PLAT BOOK AND PAGE; OHW OVERHEAD UTILITY WIRES; ORB OFFICIAL RECORDS BOOK; CBS CONCRETE BLOCK STRUCTURE; CONC. CONCRETE; C.L.F. CHAINLINK FENCE; W.F. WOOD FENCE; FND. I.P. FOUND IRON PIPE; FND. N&D. FOUND NAIL & BRASS DISC; CLR. CLEAR; ENCR. ENCROACHMENT; (D) DEED OR LEGAL DISTANCE; (M) MEASURED DISTANCE; (R) RECORD OR PLATTED DISTANCE; (C) RECORD CALCULATED; U.E. UTILITY EASEMENT; CONCRETE; DENOTES PALM; DENOTES TREE

SURVEYOR'S NOTES

1. FIELD SURVEY WAS COMPLETED ON: APRIL 29, 2025 AND UPDATED ON SEPTEMBER 22, 2025.
2. LEGAL DESCRIPTION WAS PROVIDED BY THE CLIENT
3. SUBJECT PROPERTY AREA:
   SEARS SITE: 565,951 sq.ft. (12.992 Acres)
   PARCEL #1 - JC PENNY SITE : 419,055 sq.ft. (9.620 Acres)
   PARCEL K1: 6,276 sq.ft (0.144 Acres)
   PARCEL K2: 9.734 sq.ft (0.223 Acres)
   PARCEL K3: 897 SQ.FT. (0.021 ACRES)
   PARCEL K4: 19,036 SQ.FT. (0.437 ACRES)
   PARCEL K5: 4,414 SQ.FT. (0.101 ACRES)
   A PORTION OF PERMANENT ACCESS EASEMENT:
   90,340 SQ.FT. (2.074 ACRES)
4. BEARINGS BASED ON AN ASSUMED BEARING OF EAST ALONG THE NORTH LINE OF SUBJECT PROPERTY SITE #1.
5. DISTANCES ALONG BOUNDARY LINES, AS SHOWN HEREON, ARE RECORD AND/OR MEASURED UNLESS OTHERWISE NOTED.
6. INTERIOR LOT LINES, AS SHOWN HEREON, ARE FOR INFORMATIONAL PURPOSE ONLY, UNLESS OTHERWISE NOTED.
7. UNDERGROUND FOOTINGS, FOUNDATIONS AND HAVE NOT BEEN LOCATED AT THE TIME OF THIS SURVEY, UNLESS OTHERWISE NOTED.
8. ABOVEGROUND AND/OR VISIBLE UTILITIES HAVE BEEN LOCATED AT THE TIME OF THIS SURVEY, UNLESS OTHERWISE NOTED.
9. SUBJECT PROPERTY HAS A DIRECT PHYSICAL ACCESS TO AND FROM PERMANENT ACCESS EASEMENT.
10. THE SURVEYOR DOES NOT DETERMINE FENCE AND/OR WALL OWNERSHIP.
11. THERE IS A GAP BETWEEN SEARS SITE AND PERMANENT ACCESS EASEMENT.
12. THIS BOUNDARY SURVEY IS SUBJECT TO EASEMENTS, RIGHTS-OF-WAY AND OTHER MATTERS THAT MIGHT BE REFLECTED ON A SEARCH OF TITLE OF THE SUBJECT PROPERTY.

PROPERTY INFORMATION

SEARS SITE

- PROPERTY ADDRESS: 1625 NW 107th AVE
  CITY OF DORAL , MIAMI-DADE, FL 33172
- PARCEL ID : 35-3032-008-0050

JC PENNY SITE

- PROPERTY ADDRESS: 1603 NW 107th AVE
  CITY OF DORAL , MIAMI-DADE, FL 33172
- PARCEL ID : 35-3032-008-0140

CERTIFY TO:

- GREYSTAR DEVELOPMENT EAST, LLC, A DELAWARE LIMITED LIABILITY COMPANY
- FIRST AMERICAN TITLE INSURANCE COMPANY
- GREENBERG TRAURIG, PA

POSSIBLE ENCROACHMENTS

- PARCEL K3 - POSSIBLE ENCROACHMENTS
- A PORTION OF CHAIN LINK FENCE, ALONG THE EAST BOUNDARY LINE, ENCROACH 0.7' FROM ADJOINING LAND ONTO SUBJECT PROPERTY. (SEE PAGE 13)
- A PORTION OF TEMPORARY CHAIN LINK FENCE, ALONG THE SOUTHWESTERLY BOUNDARY LINE, ENCROACH 1.7' FROM SUBJECT PROPERTY ONTO PERMANENT ACCESS EASEMENT. (SEE PAGE 12)

REVISIONS

DATE	JOB No.	REV.	BY:
05/27/25	155116	UPDATE TITLE OF COMMITMENT	C.A.F.
09/23/25	155443-5	UPDATE BOUNDARY SURVEY	C.A.F.
06/11/25	155443-5	UPDATE BOUNDARY SURVEY	C.A.F.

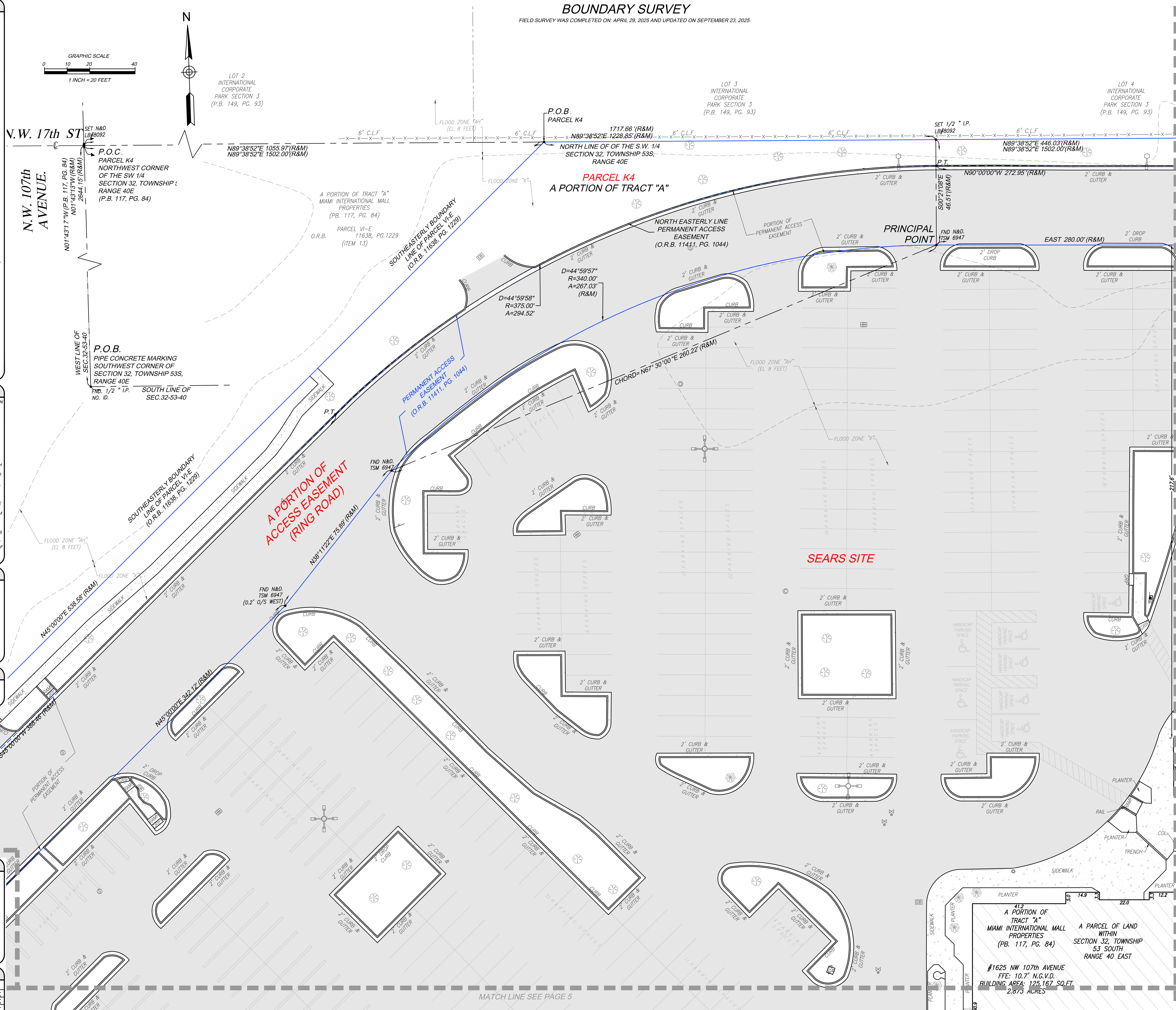

BOUNDARY SURVEY

PREPARED FOR:

GREYSTAR DEVELOPMENT EAST, LLC

LYING AND BEING IN SECTION 32, TOWNSHIP 53 SOUTH, RANGE 40 EAST
CITY OF DORAL, MIAMI-DADE COUNTY, FLORIDA.

J.Hernandez & Associates Inc
LAND SURVEYORS AND MAPPERS
CERTIFICATE OF AUTHORIZATION No. LB8092
3300 NW 112th AVE. SUITE #10, DORAL, FL 33172
(P) 305-526-0606 (E) info@jhasurveys.com

DRAWN BY: C.A.F.	CHECKED BY: J.G.H.	JOB NUM: 155116
DATE: 05/01/2025	DATE: 05/01/2025	F.B.: MD-80, PG. 30

LEGAL DESCRIPTION

SEARS SITE

A PARCEL OF LAND LOCATED WITHIN SECTION 32, TOWNSHIP 53 SOUTH, RANGE 40 EAST, LYING AND BEING IN DADE COUNTY, FLORIDA AND FURTHER BOUNDED AND DESCRIBED AS FOLLOWS:

BEGINNING AT A PIPE IN CONCRETE MARKING THE SOUTHWEST CORNER OF SAID SECTION 32, THENCE N 1° 43' 13" W, ALONG THE WEST LINE OF SAID SECTION 32, A DISTANCE OF 2644.15 FEET TO A POINT; THENCE N 89° 38' 52" E, A DISTANCE OF 1228.85 FEET TO A POINT; THENCE S 0° 21' 08" E, A DISTANCE OF 46.51 FEET TO THE PRINCIPAL POINT AND PLACE OF BEGINNING OF THE FOLLOWING DESCRIPTION:

THENCE DUE EAST, A DISTANCE OF 280.00 FEET TO A POINT; THENCE 247.40 FEET ALONG AN ARC TO THE RIGHT, HAVING A RADIUS OF 315.00 FEET AND A CHORD OF 241.09 FEET, BEARING S 67° 30' 00" E TO A POINT; THENCE S 45° 00' 00" E, A DISTANCE OF 297.19 FEET TO A POINT; THENCE S 45° 00' 00" W, A DISTANCE OF 426.52 FEET TO A POINT; THENCE DUE WEST, A DISTANCE OF 472.87 FEET TO A POINT; THENCE S 45° 00' 00" W, A DISTANCE OF 171.25 FEET TO A POINT; THENCE N 45° 00' 00" W, A DISTANCE OF 413.50 FEET TO A POINT; THENCE S 45° 00' 00" W, A DISTANCE OF 16.00 FEET TO A POINT; THENCE N 45° 00' 00" W, A DISTANCE OF 60.63 FEET TO A POINT; THENCE N 45° 00' 00" E, A DISTANCE OF 342.12 FEET TO A POINT; THENCE N 38° 11' 22.8" E, A DISTANCE OF 75.89 FEET TO A POINT; THENCE 267.04 FEET ALONG AN ARC TO THE RIGHT, HAVING A RADIUS OF 340.00 FEET AND A CHORD OF 260.22 FEET, BEARING N 67° 30' 00" E TO THE PRINCIPAL POINT AND PLACE OF BEGINNING.

TOGETHER WITH

JC PENNY SITE
PARCEL 1

A PART OF TRACT A, MIAMI INTERNATIONAL MALL PROPERTIES, ACCORDING TO THE PLAT RECORDED IN PLAT BOOK 117, PAGE 84, PUBLIC RECORDS OF MIAMI-DADE COUNTY, FLORIDA, AND FURTHER BOUNDED AND DESCRIBED AS FOLLOWS:

BEGINNING AT A PIPE IN CONCRETE MARKING THE SOUTHWEST COMER OF SAID SECTION 32, TOWNSHIP 53 SOUTH, RANGE 40 EAST; THENCE NORTH 89° 20' 55" EAST ALONG THE SOUTH LINE OF SECTION 32, A DISTANCE OF 2250.00 FEET TO A POINT; THENCE NORTH 01° 43' 13" WEST A DISTANCE OF 1149.03 FEET TO A POINT; THENCE SOUTH 88° 16' 47" WEST A DISTANCE OF 45.00 FEET TO A POINT; THENCE NORTH 01° 43' 13" WEST A DISTANCE OF 263.14 FEET TO A POINT, SAID POINT BEING THE PRINCIPAL POINT AND PLACE OF BEGINNING OF THE FOLLOWING DESCRIPTION: THENCE DUE WEST A DISTANCE OF 244.73 FEET TO A POINT; THENCE DUE NORTH A DISTANCE OF 102.00 FEET TO A POINT; THENCE DUE WEST A DISTANCE OF 432.00 FEET TO A POINT; THENCE DUE NORTH A DISTANCE OF 386.97 FEET TO A POINT; THENCE NORTH 45° 00' 00" EAST A DISTANCE OF 532.98 FEET TO A POINT; THENCE SOUTH 45° 00' 00" EASI A DISTANCE OF 274.31 FEET TO A POINT; THENCE 237.94 FEET ALONG AN ARC TO THE RIGHT, HAVING A RADIUS OF 315.00 FEET AND A CENTRAL ANGLE OF 43° 16' 47" TO A POINT; THENCE SOUTH 01°43' 13" EAST A DISTANCE OF 458.80 FEET TO A POINT, SAID POINT BEING THE PRINCIPAL POINT AND PLACE OF BEGINNING.

PARCEL 2

EASEMENT RIGHTS AS SET FORTH IN THE MIAMI INTERNATIONAL MALL EASEMENT AND OPERATING AGREEMENT BY AND AMONG SEARS, ROEBUCK AND CO .; ALSTORES REALTY CORPORATION; JORDAN MARSH COMPANY; FEDERATED DEPARTMENT STORES, INC .; ASSOCIATED DRY GOOD CORPORATION; AND WEST DADE COUNTY ASSOCIATES RECORDED APRIL 15, 1982 IN OFFICIAL RECORDS BOOK 11411, PAGE 1044: AS AFFECTED BY FIRST AMENDMENT TO EASEMENT AND OPERATING AGREEMENT BY AND BETWEEN SEARS, ROEBUCK AND CO .; ALLIED STORES GENERAL REAL ESTATE COMPANY; MAAS, INC .: BURDINE'S REAL ESTATE, INC .; J.C. PENNEY COMPANY, INC .; MERVYN'S; AND WEST DADE COUNTY ASSOCIATES, RECORDED OCTOBER 22, 1991 IN OFFICIAL RECORDS BOOK 15238, PAGE 2289; AND BY SECOND AMENDMENT TO EASEMENT AND OPERATING AGREEMENT BY AND BETWEEN SERITAGE SRC FINANCE LLC; MACY'S FLORIDA STORES, LLC; J.C. PENNEY CORPORATION, INC .; KOHL'S DEPARTMENT STORES, INC .; AND WEST DADE COUNTY ASSOCIATES RECORDED AUGUST 30, 2017 IN OFFICIAL RECORDS BOOK 30674, PAGE 1502; AND BY THIRD AMENDMENT TO EASEMENT AND OPERATING AGREEMENT BY AND BETWEEN SERITAGE SRC FINANCE LLC; MACY'S FLORIDA STORES, LLC; J.C. PENNEY CORPORATION, INC .; KOHL'S DEPARTMENT STORES, INC .; AND WEST DADE COUNTY ASSOCIATES RECORDED NOVEMBER 9, 2017 IN OFFICIAL RECORDS BOOK 30752, PAGE 434; AND BY FOURTH AMENDMENT TO EASEMENT AND OPERATING AGREEMENT RECORDED DECEMBER 8, 2017 IN OFFICIAL RECORDS BOOK 30785, PAGE 3451; AND BY FIFTH AMENDMENT TO EASEMENT AND OPERATING AGREEMENT BY AND BETWEEN SERITAGE SRC FINANCE LLC; MACY'S FLORIDA STORES, LLC; J.C. PENNEY CORPORATION, INC .; KOHL'S DEPARTMENT STORES, INC .; AND WEST DADE COUNTY ASSOCIATES RECORDED JUNE 21, 2018 IN OFFICIAL RECORDS BOOK 31023, PAGE 4347, PUBLIC RECORDS OF MIAMI-DADE COUNTY, FLORIDA.

TOGETHER WITH

PARCEL K1

A PORTION OF TRACT "A", MIAMI INTERNATIONAL MALL PROPERTIES ACCORDING TO THE PLAT THEREOF, AS RECORDED IN PLAT BOOK 117, PAGE 84, OF THE PUBLIC RECORDS OF MIAMI-DADE COUNTY, AND BEING MORE PARTICULARLY DESCRIBED AS FOLLOWS.

BEGINNING AT A PIPE IN CONCRETE MARKING THE SOUTHWEST CORNER OF SAID SECTION 32, THENCE N 1° 43' 13" W, ALONG THE WEST LINE OF SAID SECTION 32, A DISTANCE OF 2644.15 FEET TO A POINT; THENCE N 89° 38' 52" E, A DISTANCE OF 1502.00 FEET TO THE POINT OF BEGINNING OF THE FOLLOWING DESCRIBED PARCEL OF LAND; THENCE CONTINUE, N 89° 38' 52" E, A DISTANCE OF 215.66 FEET; THENCE, S 45° 00' 00" W, A DISTANCE OF 53.79 FEET TO A POINT; THENCE, S 45° 00' 00" E, A DISTANCE OF 110.32 FEET TO A POINT; THENCE, S 45° 00' 00" W, A DISTANCE OF 1.42 FEET TO A NON-TANGENT POINT; SAID POINT BEARS OF N 45° 00' 00" E FROM RADIUS POINT OF THE FOLLOWING DESCRIBED CIRCULAR CURVE CONCAVE TO THE SOUTHWEST AND HAVING A RADIUS OF 350.00 FEET; THENCE ALONG SAID CURVE TO THE LEFT FOR AN ARC DISTANCE OF 274.89 FEET THROUGH A CENTRAL ANGLE OF 45°00'00" TO A POINT OF TANGENCY; THENCE, N 90° 00' 00" W, FOR A DISTANCE OF 7.05 FEET TO A POINT (THE LAST TWO COURSES BEING CONCIDENT WITH THE OUTER EDGE OF PERMANENT ACCESS EASEMENT, AS RECORDED IN OFFICIAL RECORD BOOK 11411, AT PAGE 1044, OF THE PUBLIC RECORDS OF MIAMI-DADE COUNTY); THENCE, N 00° 21' 08" W, FOR A DISTANCE OF 13.20 FEET TO THE POINT OF BEGINNING.

TOGETHER WITH

PARCEL K2

A PORTION OF TRACT "A", MIAMI INTERNATIONAL MALL PROPERTIES ACCORDING TO THE PLAT THEREOF, AS RECORDED IN PLAT BOOK 117, PAGE 84, OF THE PUBLIC RECORDS OF MIAMI-DADE COUNTY, AND BEING MORE PARTICULARLY DESCRIBED AS FOLLOWS.

BEGINNING AT A PIPE IN CONCRETE MARKING THE SOUTHWEST CORNER OF SAID SECTION 32, THENCE N 1° 43' 13" W, ALONG THE WEST LINE OF SAID SECTION 32, A DISTANCE OF 2644.15 FEET TO A POINT; THENCE N 89° 38' 52" E, A DISTANCE OF 1717.66 FEET TO A POINT (ALSO KNOWN AS PRINCIPAL POINT); THENCE CONTINUE, N 89° 38' 52" E, A DISTANCE OF 532.59 FEET TO A POINT; THENCE, S 01° 43' 13" E, A DISTANCE OF 476.94 FEET TO THE POINT OF BEGINNING OF THE FOLLOWING DESCRIBED PARCEL OF LAND; THENCE CONTINUE, S 01° 43' 13" E, A DISTANCE OF 284.52 FEET TO A POINT; THENCE, S 88° 16' 47" W, A DISTANCE OF 10.00 FEET TO A POINT OF NON-TANGENT; SAID POINT BEARS OF N 88° 16' 47" E FROM RADIUS POINT OF THE FOLLOWING DESCRIBED CIRCULAR CURVE CONCAVE TO THE SOTHWEST AND HAVING A RADIUS OF 350.00 FEET; THENCE ALONG SAID CURVE TO THE LEFT FOR AN ARC DISTANCE OF 224.62 FEET THROUGH A CENTRAL ANGLE OF 36°46'17" TO A POINT (THE LAST COURSE BEING COINCIDENT WITH THE OUTER EDGE OF PERMANENT ACCESS EASEMENT, AS RECORDED ON SAID OFFICIAL RECORD BOOK 11411, AT PAGE 1044); THENCE, N 45°00'00" E, A DISTANCE OF 109.39 FEET TO THE POINT OF BEGINNING.

TOGETHER WITH

PARCEL K3

A PORTION OF TRACT "A", MIAMI INTERNATIONAL MALL PROPERTIES, ACCORDING TO THE PLAT THEREOF, AS RECORDED IN PLAT BOOK 117 AT PAGE 84 OF THE PUBLIC RECORDS OF MIAMI-DADE COUNTY FLORIDA AND BEING MORE PARTICULARLY DESCRIBED AS FOLLOWS:

COMMENCE AT THE MOST NORTHWESTERLY CORNER OF PARCEL IV, AS DESCRIBED IN OFFICIAL RECORDS BOOK 11411 AT PAGE 1044 OF THE PUBLIC RECORDS OF MIAMI-DADE COUNTY FLORIDA; THENCE RUN SOUTH 45 DEGREES 00 MINUTES 00 SECONDS EAST, ALONG THE SOUTHWESTERLY BOUNDARY LINE OF SAID PARCEL IV, FOR A DISTANCE OF 110.32 FEET TO THE POINT OF BEGINNING OF THE FOLLOWING PARCEL OF LAND; THENCE CONTINUE SOUTH 45 DEGREES 00 MINUTES 00 SECONDS EAST, ALONG SAID SOUTHWESTERLY BOUNDARY LINE OF SAID PARCEL IV, FOR A DISTANCE OF 611.18 FEET; THENCE SOUTH 45 DEGREES 00 MINUTES 00 SECONDS WEST, ALONG THE SOUTHWESTERLY EXTENSION OF THE SOUTHEASTERLY BOUNDARY LINE OF SAID PARCEL IV, FOR A DISTANCE OF 3.67 FEET TO A POINT; SAID POINT BEARS A BEARING OF NORTH 51 DEGREES 30 MINUTES 30 SECONDS EAST FROM THE RADIUS POINT OF THE FOLLOWING DESCRIBED CIRCULAR CURVE CONCAVE TO THE SOUTHWEST, HAVING A RADIUS OF 350.00 FEET AND A CENTRAL ANGLES OF 6 DEGREES 30 MINUTES 29 SECONDS FOR AN ARC DISTANCE OF 39.76 FEET TO A POINT OF TANGENCY; THENCE NORTH 45 DEGREES 00 MINUTES 00 SECONDS WEST FOR A DISTANCE OF 571.51 FEET (LAST MENTIONED TWO COURSE BEING ALONG THE NORTHEASTERLY BOUNDARY LINE OF PERMANENT ACCESS EASEMENT, AS DESCRIBED IN OFFICIAL RECORD BOOK 11411 AT PAGE 1044 OF THE PUBLIC RECORDS OF MIAMI-DADE COUNTY FLORIDA); THENCE NORTH 45 DEGREES 00 MINUTES 00 SECONDS EAST FOR A DISTANCE OF 1.42 FEET TO THE POINT OF BEGINNING.

TOGETHER WITH

PARCEL K4

A PORTION OF TRACT "A", MIAMI INTERNATIONAL MALL PROPERTIES ACCORDING TO THE PLAT THEREOF, AS RECORDED IN PLAT BOOK 117, PAGE 84, OF THE PUBLIC RECORDS OF MIAMI-DADE COUNTY, AND BEING MORE PARTICULARLY DESCRIBED AS FOLLOWS.

COMMENCE AT THE NORTHWEST CORNER OF THE SOUTHWEST 1/4 OF SECTION 32 TOWNSHIP 53 SOUTH, RANGE 40 EAST, AS SHOWN ON SAID PLAT OF MIAMI INTERNATIONAL MALL PROPERTIES; THENCE RUN, N 89° 38' 52" E, ALONG THE NORTH LINE OF SAID SECTION 32, A DISTANCE OF 1055.97 TO THE POINT OF BEGINNING OF THE FOLLOWING DESCRIBED PARCEL OF LAND; THENCE CONTINUE, N 89° 38' 52" E, ALONG THE NORTH LINE OF SAID SECTION 32, A DISTANCE OF 446.03 TO A POINT; THENCE, S 00°21'08"E, A DISTANCE OF 13.20 FEET TO A POINT; THENCE, N 90° 00' 00" W, FOR A DISTANCE OF 272.95 FEET TO A POINT OF CURVATURE OF A CIRCULAR CURVE TO THE LEFT, CONCAVE TO THE SOUTHEAST HAVING A RADIUS OF 375.00 FEET THROUGH A CENTRAL ANGLE OF 44°59'58" FOR AN ARC OF 294.52 FEET TO A POINT OF TANGENCY; THENCE, S45°00'00"W, A DISTANCE OF 388.46 FEET (THE LAST MENTIONED THREE COURSES BEING ALONG THE NORTHEASTERLY BOUNDARY LINE OF PERMANENT ACCESS EASEMENT, AS DESCRIBED IN OFFICIAL RECORD BOOK 11411 AT PAGE 1044 OF THE PUBLIC RECORDS OF MIAMI-DADE COUNTY FLORIDA); THENCE, N45°00'00"W, A DISTANCE OF 20.00 FEET; THENCE, N45°00'00"E, A DISTANCE OF 538.58 FEET TO THE POINT OF BEGINNING (LAST MENTIONED COURSE BEING ALONG THE SOUTHEASTERLY BOUNDARY LINE OF PARCEL VI-E AND ITS SOUTHWESTERLY EXTENSION, AS DESCRIBED IN OFFICIAL RECORD BOOK 11638, AT PAGE 1229 OF THE PUBLIC RECORDS OF MIAMI-DADE COUNTY FLORIDA).

TOGETHER WITH

PARCEL K5

A PORTION OF TRACT "A", MIAMI INTERNATIONAL MALL PROPERTIES ACCORDING TO THE PLAT THEREOF, AS RECORDED IN PLAT BOOK 117, PAGE 84, OF THE PUBLIC RECORDS OF MIAMI-DADE COUNTY, AND BEING MORE PARTICULARLY DESCRIBED AS FOLLOWS.

COMMENCE AT THE NORTHEAST CORNER OF SAID TRACT "A", AS SHOWN ON SAID PLAT OF MIAMI INTERNATIONAL MALL PROPERTIES; THENCE RUN, S01°43'13"E, ALONG THE EASTERLY LINE OF SAID TRACT "A", A DISTANCE OF 761.46 FEET TO THE POINT OF BEGINNING OF THE FOLLOWING DESCRIBED PARCEL OF LAND; THENCE CONTINUE, S01°43'13"E, ALONG THE EASTERLY LINE OF SAID TRACT "A", A DISTANCE OF 458.78 FEET TO A POINT; THENCE, S88°16'47"W, A DISTANCE OF 10.00 FEET TO A POINT; THENCE, N01°43'13"W, ALONG THE EASTERLY BOUNDARY LINE OF PERMANENT ACCESS EASEMENT, AS DESCRIBED IN OFFICIAL RECORD BOOK 11411 AT PAGE 1044 OF THE PUBLIC RECORDS OF MIAMI-DADE COUNTY FLORIDA, A DISTANCE 458.78 FEET TO A POINT; THENCE, N88°16'47"E, A DISTANCE OF 10.00 FEET TO THE POINT OF BEGINNING.

TOGETHER WITH

A PORTION OF ACCESS EASEMENT (RING ROAD)

A PORTION OF PERMANENT ACCESS EASEMENT, AS SHOWN IN OFFICIAL RECORD BOOK 11411, AT PAGE 1044 OF THE PUBLIC RECORDS OF MIAMI-DADE COUNTY, BOUNDED ON THE WEST BY A LINE PERPENDICULAR TO AND 29.00 FEET NORTHEASTERLY FROM THE MOST WESTERLY CORNER OF SEARS SITE (SAID DISTANCE BEING ALONG THE SOUTHEASTERLY LINE OF PERMANENT ACCESS EASEMENT) AND BOUNDED ON THE EAST BY A PERPENDICULAR LINE TO SAID PERMANENT ACCESS EASEMENT AT THE MOST SOUTHEASTERLY CORNER OF SAID JC PENNY SITE.

SURVEYOR'S CERTIFICATION:

I HEREBY CERTIFY THAT THIS "BOUNDARY SURVEY" OF THE PROPERTY DESCRIBED HEREON IS TRUE AND CORRECT TO THE BEST OF MY KNOWLEDGE AND BELIEF AS RECENTLY SURVEYED AND DRAWN UNDER MY SUPERVISION AND DIRECTION. THIS SURVEY COMPLIES WITH STANDARDS OF PRACTICE REQUIREMENTS ADOPTED BY THE FLORIDA STATE BOARD OF SURVEYORS AND MAPPERS PURSUANT TO CHAPTER 5J-17, FLORIDA ADMINISTRATIVE CODE.

THIS CERTIFICATION DOES NOT EXTEND TO ANY UNNAMED PARTIES.

BY:__________
JOSE G. HERNANDEZ, PRESIDENT
PROFESSIONAL LAND SURVEYOR No. 6952
STATE OF FLORIDA.

THE ELECTRONIC SEAL AND SIGNATURE APPEARING ON THIS SURVEY WAS AUTHORIZED BY JOSE G. HERNANDEZ, PROFESSIONAL LAND SURVEYOR NO. 6952 OF THE STATE OF FLORIDA ON MARCH 24, 2026.

THIS IS A BOUNDARY SURVEY
PROJECT NUMBER: MD-730

BOUNDARY SURVEY

FIELD SURVEY WAS COMPLETED ON: APRIL 29, 2025 AND UPDATED ON SEPTEMBER 23, 2025.

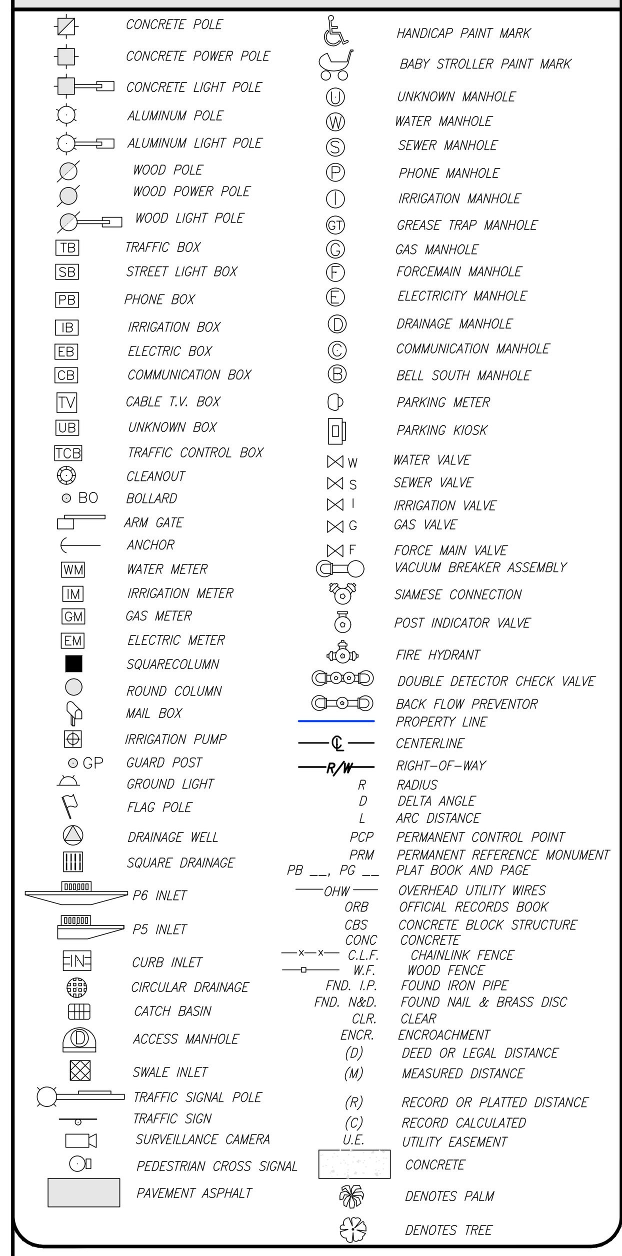

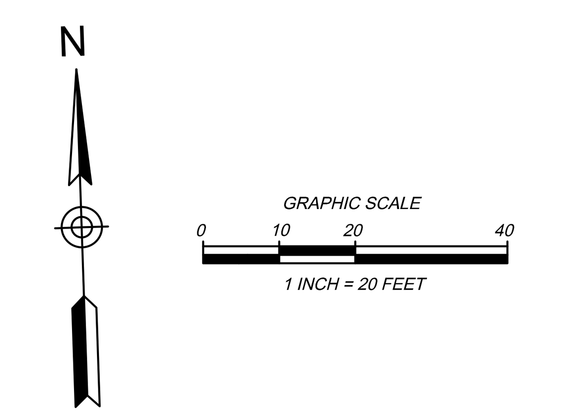

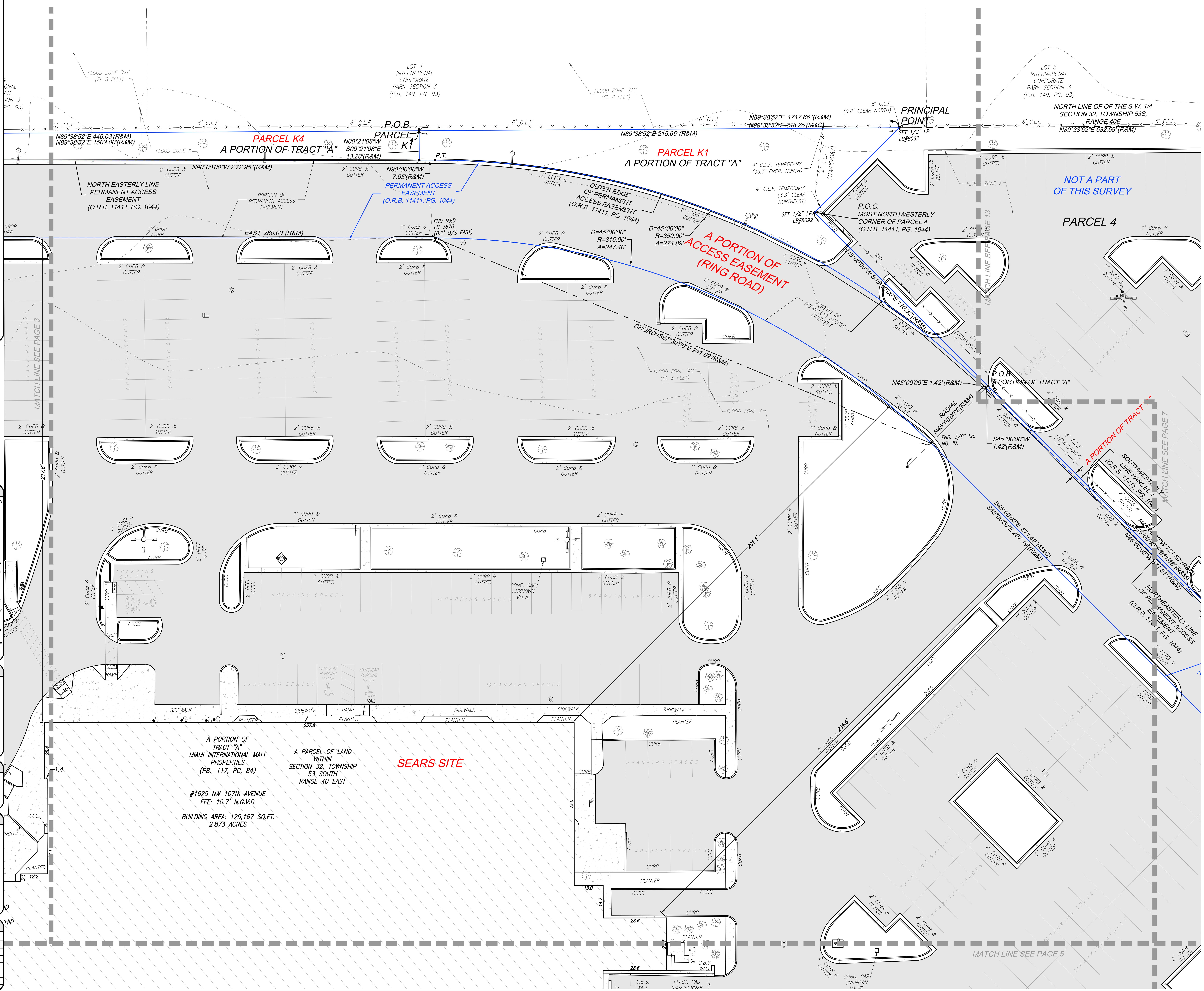

SURVEYOR'S NOTES

1. FIELD SURVEY WAS COMPLETED ON: APRIL 29, 2025 AND UPDATED ON SEPTEMBER 22, 2025.
2. LEGAL DESCRIPTION WAS PROVIDED BY THE CLIENT
3. SUBJECT PROPERTY AREA:
   SEARS SITE: 565,951 sq.ft. (12.992 Acres)
   PARCEL #1 - JC PENNY SITE : 419,055 sq.ft. (9.620 Acres)
   PARCEL K1: 6,276 sq.ft (0.144 Acres)
   PARCEL K2: 9.734 sq.ft (0.223 Acres)
   PARCEL K3: 897 SQ.FT. (0.021 ACRES)
   PARCEL K4: 19,036 SQ.FT. (0.437 ACRES)
   PARCEL K5: 4,414 SQ.FT. (0.101 ACRES)
   A PORTION OF PERMANENT ACCESS EASEMENT:
   90,340 SQ.FT. (2.074 ACRES)
4. BEARINGS BASED ON AN ASSUMED BEARING OF EAST ALONG THE NORTH LINE OF SUBJECT PROPERTY SITE #1.
5. DISTANCES ALONG BOUNDARY LINES, AS SHOWN HEREON, ARE RECORD AND/OR MEASURED UNLESS OTHERWISE NOTED.
6. INTERIOR LOT LINES, AS SHOWN HEREON, ARE FOR INFORMATIONAL PURPOSE ONLY, UNLESS OTHERWISE NOTED.
7. UNDERGROUND FOOTINGS, FOUNDATIONS AND HAVE NOT BEEN LOCATED AT THE TIME OF THIS SURVEY, UNLESS OTHERWISE NOTED.
8. ABOVEGROUND AND/OR VISIBLE UTILITIES HAVE BEEN LOCATED AT THE TIME OF THIS SURVEY, UNLESS OTHERWISE NOTED.
9. SUBJECT PROPERTY HAS A DIRECT PHYSICAL ACCESS TO AND FROM PERMANENT ACCESS EASEMENT.
10. THE SURVEYOR DOES NOT DETERMINE FENCE AND/OR WALL OWNERSHIP.
11. THERE IS A GAP BETWEEN SEARS SITE AND PERMANENT ACCESS EASEMENT.
12. THIS BOUNDARY SURVEY IS SUBJECT TO EASEMENTS, RIGHTS-OF-WAY AND OTHER MATTERS THAT MIGHT BE REFLECTED ON A SEARCH OF TITLE OF THE SUBJECT PROPERTY.

PROPERTY INFORMATION

SEARS SITE

- PROPERTY ADDRESS: 1625 NW 107th AVE
  CITY OF DORAL , MIAMI-DADE, FL 33172
- PARCEL ID: 35-3032-008-0050

JC PENNY SITE

- PROPERTY ADDRESS: 1603 NW 107th AVE
  CITY OF DORAL , MIAMI-DADE, FL 33172
- PARCEL ID: 35-3032-008-0140

CERTIFY TO:

- GREYSTAR DEVELOPMENT EAST, LLC, A DELAWARE LIMITED LIABILITY COMPANY
- FIRST AMERICAN TITLE INSURANCE COMPANY
- GREENBERG TRAURIG, PA

POSSIBLE ENCROACHMENTS

- PARCEL K3 - POSSIBLE ENCROACHMENTS
- A PORTION OF CHAIN LINK FENCE, ALONG THE EAST BOUNDARY LINE, ENCROACH 0.7' FROM ADJOINING LAND ONTO SUBJECT PROPERTY. (SEE PAGE 13)
- A PORTION OF TEMPORARY CHAIN LINK FENCE, ALONG THE SOUTHWESTERLY BOUNDARY LINE, ENCROACH 1.7' FROM SUBJECT PROPERTY ONTO PERMANENT ACCESS EASEMENT. (SEE PAGE 12)

REVISIONS

DATE	JOB No.	REV.	BY:
05/27/25	155116	UPDATE TITLE OF COMMITMENT	C.A.F.
09/23/25	155443-5 / 155116 (overprinted)	UPDATE BOUNDARY SURVEY	C.A.F.
06/11/25	155443-5	UPDATE BOUNDARY SURVEY	C.A.F.

BOUNDARY SURVEY

PREPARED FOR:
GREYSTAR DEVELOPMENT EAST, LLC
LYING AND BEING IN SECTION 32, TOWNSHIP 53 SOUTH, RANGE 40 EAST
CITY OF DORAL, MIAMI-DADE COUNTY, FLORIDA.

J.Hernandez & Associates Inc
LAND SURVEYORS AND MAPPERS
CERTIFICATE OF AUTHORIZATION No. LB8092
3300 NW 112th AVE. SUITE #10, DORAL, FL 33172
(P) 305-526-0606 (E) info@jhasurveys.com

DRAWN BY: C.A.F.	CHECKED BY: J.G.H.	JOB NUM: 155116
DATE: 05/01/2025	DATE: 05/01/2025	F.B.: MD-80, PG. 30

LEGAL DESCRIPTION

SEARS SITE

A PARCEL OF LAND LOCATED WITHIN SECTION 32, TOWNSHIP 53 SOUTH, RANGE 40 EAST, LYING AND BEING IN DADE COUNTY, FLORIDA AND FURTHER BOUNDED AND DESCRIBED AS FOLLOWS:

BEGINNING AT A PIPE IN CONCRETE MARKING THE SOUTHWEST CORNER OF SAID SECTION 32, THENCE N 1° 43' 13" W, ALONG THE WEST LINE OF SAID SECTION 32, A DISTANCE OF 2644.15 FEET TO A POINT; THENCE N 89° 38' 52" E, A DISTANCE OF 1228.85 FEET TO A POINT; THENCE S 0° 21' 08" E, A DISTANCE OF 46.51 FEET TO THE PRINCIPAL POINT AND PLACE OF BEGINNING OF THE FOLLOWING DESCRIPTION:

THENCE DUE EAST, A DISTANCE OF 280.00 FEET TO A POINT; THENCE 247.40 FEET ALONG AN ARC TO THE RIGHT, HAVING A RADIUS OF 315.00 FEET AND A CHORD OF 241.09 FEET, BEARING S 67° 30' 00" E TO A POINT; THENCE S 45° 00' 00" E, A DISTANCE OF 297.19 FEET TO A POINT; THENCE S 45° 00' 00" W, A DISTANCE OF 426.52 FEET TO A POINT; THENCE DUE WEST, A DISTANCE OF 472.87 FEET TO A POINT; THENCE S 45° 00' 00" W, A DISTANCE OF 171.25 FEET TO A POINT; THENCE N 45° 00' 00" W, A DISTANCE OF 413.50 FEET TO A POINT; THENCE S 45° 00' 00" W, A DISTANCE OF 16.00 FEET TO A POINT; THENCE N 45° 00' 00" W, A DISTANCE OF 60.63 FEET TO A POINT; THENCE N 45° 00' 00" E, A DISTANCE OF 342.12 FEET TO A POINT; THENCE N 38° 11' 22.8" E, A DISTANCE OF 75.89 FEET TO A POINT; THENCE 267.04 FEET ALONG AN ARC TO THE RIGHT, HAVING A RADIUS OF 340.00 FEET AND A CHORD OF 260.22 FEET, BEARING N 67° 30' 00" E TO THE PRINCIPAL POINT AND PLACE OF BEGINNING.

TOGETHER WITH

JC PENNY SITE
PARCEL 1

A PART OF TRACT A, MIAMI INTERNATIONAL MALL PROPERTIES, ACCORDING TO THE PLAT RECORDED IN PLAT BOOK 117, PAGE 84, PUBLIC RECORDS OF MIAMI-DADE COUNTY, FLORIDA, AND FURTHER BOUNDED AND DESCRIBED AS FOLLOWS:

BEGINNING AT A PIPE IN CONCRETE MARKING THE SOUTHWEST COMER OF SAID SECTION 32, TOWNSHIP 53 SOUTH, RANGE 40 EAST; THENCE NORTH 89° 20' 55" EAST ALONG THE SOUTH LINE OF SECTION 32, A DISTANCE OF 2250.00 FEET TO A POINT; THENCE NORTH 01° 43' 13" WEST A DISTANCE OF 1149.03 FEET TO A POINT; THENCE SOUTH 88° 16' 47" WEST A DISTANCE OF 45.00 FEET TO A POINT; THENCE NORTH 01° 43' 13" WEST A DISTANCE OF 263.14 FEET TO A POINT, SAID POINT BEING THE PRINCIPAL POINT AND PLACE OF BEGINNING OF THE FOLLOWING DESCRIPTION: THENCE DUE WEST A DISTANCE OF 244.73 FEET TO A POINT; THENCE DUE NORTH A DISTANCE OF 102.00 FEET TO A POINT; THENCE DUE WEST A DISTANCE OF 432.00 FEET TO A POINT; THENCE DUE NORTH A DISTANCE OF 386.97 FEET TO A POINT; THENCE NORTH 45° 00' 00" EAST A DISTANCE OF 532.98 FEET TO A POINT; THENCE SOUTH 45° 00' 00" EASI A DISTANCE OF 274.31 FEET TO A POINT; THENCE 237.94 FEET ALONG AN ARC TO THE RIGHT, HAVING A RADIUS OF 315.00 FEET AND A CENTRAL ANGLE OF 43° 16' 47" TO A POINT; THENCE SOUTH 01°43' 13" EAST A DISTANCE OF 458.80 FEET TO A POINT, SAID POINT BEING THE PRINCIPAL POINT AND PLACE OF BEGINNING.

PARCEL 2

EASEMENT RIGHTS AS SET FORTH IN THE MIAMI INTERNATIONAL MALL EASEMENT AND OPERATING AGREEMENT BY AND AMONG SEARS, ROEBUCK AND CO .; ALSTORES REALTY CORPORATION; JORDAN MARSH COMPANY; FEDERATED DEPARTMENT STORES, INC .; ASSOCIATED DRY GOOD CORPORATION; AND WEST DADE COUNTY ASSOCIATES RECORDED APRIL 15, 1982 IN OFFICIAL RECORDS BOOK 11411, PAGE 1044: AS AFFECTED BY FIRST AMENDMENT TO EASEMENT AND OPERATING AGREEMENT BY AND BETWEEN SEARS, ROEBUCK AND CO .; ALLIED STORES GENERAL REAL ESTATE COMPANY; MAAS, INC .: BURDINE'S REAL ESTATE, INC .; J.C. PENNEY COMPANY, INC .; MERVYN'S; AND WEST DADE COUNTY ASSOCIATES, RECORDED OCTOBER 22, 1991 IN OFFICIAL RECORDS BOOK 15238, PAGE 2289; AND BY SECOND AMENDMENT TO EASEMENT AND OPERATING AGREEMENT BY AND BETWEEN SERITAGE SRC FINANCE LLC; MACY'S FLORIDA STORES, LLC; J.C. PENNEY CORPORATION, INC .; KOHL'S DEPARTMENT STORES, INC .; AND WEST DADE COUNTY ASSOCIATES RECORDED AUGUST 30, 2017 IN OFFICIAL RECORDS BOOK 30674, PAGE 1502; AND BY THIRD AMENDMENT TO EASEMENT AND OPERATING AGREEMENT BY AND BETWEEN SERITAGE SRC FINANCE LLC; MACY'S FLORIDA STORES, LLC; J.C. PENNEY CORPORATION, INC .; KOHL'S DEPARTMENT STORES, INC .; AND WEST DADE COUNTY ASSOCIATES RECORDED NOVEMBER 9, 2017 IN OFFICIAL RECORDS BOOK 30752, PAGE 434; AND BY FOURTH AMENDMENT TO EASEMENT AND OPERATING AGREEMENT RECORDED DECEMBER 8, 2017 IN OFFICIAL RECORDS BOOK 30785, PAGE 3451; AND BY FIFTH AMENDMENT TO EASEMENT AND OPERATING AGREEMENT BY AND BETWEEN SERITAGE SRC FINANCE LLC; MACY'S FLORIDA STORES, LLC; J.C. PENNEY CORPORATION, INC .; KOHL'S DEPARTMENT STORES, INC .; AND WEST DADE COUNTY ASSOCIATES RECORDED JUNE 21, 2018 IN OFFICIAL RECORDS BOOK 31023, PAGE 4347, PUBLIC RECORDS OF MIAMI-DADE COUNTY, FLORIDA.

TOGETHER WITH

PARCEL K1

A PORTION OF TRACT "A", MIAMI INTERNATIONAL MALL PROPERTIES ACCORDING TO THE PLAT THEREOF, AS RECORDED IN PLAT BOOK 117, PAGE 84, OF THE PUBLIC RECORDS OF MIAMI-DADE COUNTY, AND BEING MORE PARTICULARLY DESCRIBED AS FOLLOWS.

BEGINNING AT A PIPE IN CONCRETE MARKING THE SOUTHWEST CORNER OF SAID SECTION 32, THENCE N 1° 43' 13" W, ALONG THE WEST LINE OF SAID SECTION 32, A DISTANCE OF 2644.15 FEET TO A POINT; THENCE N 89° 38' 52" E, A DISTANCE OF 1502.00 FEET TO THE POINT OF BEGINNING OF THE FOLLOWING DESCRIBED PARCEL OF LAND; THENCE CONTINUE, N 89° 38' 52" E, A DISTANCE OF 215.66 FEET; THENCE, S 45° 00' 00" W, A DISTANCE OF 53.79 FEET TO A POINT; THENCE, S 45° 00' 00" E, A DISTANCE OF 110.32 FEET TO A POINT; THENCE, S 45° 00' 00" W, A DISTANCE OF 1.42 FEET TO A NON-TANGENT POINT; SAID POINT BEARS OF N 45° 00' 00" E FROM RADIUS POINT OF THE FOLLOWING DESCRIBED CIRCULAR CURVE CONCAVE TO THE SOUTHWEST AND HAVING A RADIUS OF 350.00 FEET; THENCE ALONG SAID CURVE TO THE LEFT FOR AN ARC DISTANCE OF 274.89 FEET THROUGH A CENTRAL ANGLE OF 45°00'00" TO A POINT OF TANGENCY; THENCE, N 90° 00' 00" W, FOR A DISTANCE OF 7.05 FEET TO A POINT (THE LAST TWO COURSES BEING CONCIDENT WITH THE OUTER EDGE OF PERMANENT ACCESS EASEMENT, AS RECORDED IN OFFICIAL RECORD BOOK 11411, AT PAGE 1044, OF THE PUBLIC RECORDS OF MIAMI-DADE COUNTY); THENCE, N 00° 21' 08" W, FOR A DISTANCE OF 13.20 FEET TO THE POINT OF BEGINNING.

TOGETHER WITH

PARCEL K2

A PORTION OF TRACT "A", MIAMI INTERNATIONAL MALL PROPERTIES ACCORDING TO THE PLAT THEREOF, AS RECORDED IN PLAT BOOK 117, PAGE 84, OF THE PUBLIC RECORDS OF MIAMI-DADE COUNTY, AND BEING MORE PARTICULARLY DESCRIBED AS FOLLOWS.

BEGINNING AT A PIPE IN CONCRETE MARKING THE SOUTHWEST CORNER OF SAID SECTION 32, THENCE N 1° 43' 13" W, ALONG THE WEST LINE OF SAID SECTION 32, A DISTANCE OF 2644.15 FEET TO A POINT; THENCE N 89° 38' 52" E, A DISTANCE OF 1717.66 FEET TO A POINT (ALSO KNOWN AS PRINCIPAL POINT); THENCE CONTINUE, N 89° 38' 52" E, A DISTANCE OF 532.59 FEET TO A POINT; THENCE, S 01° 43' 13" E, A DISTANCE OF 476.94 FEET TO THE POINT OF THE FOLLOWING DESCRIBED PARCEL OF LAND; THENCE CONTINUE, S 01° 43' 13" E, A DISTANCE OF 284.52 FEET TO A POINT; THENCE, S 88° 16' 47" W, A DISTANCE OF 10.00 FEET TO A POINT OF NON-TANGENT; SAID POINT BEARS OF N 88° 16' 47" E FROM RADIUS POINT OF THE FOLLOWING DESCRIBED CIRCULAR CURVE CONCAVE TO THE SOTHWEST AND HAVING A RADIUS OF 350.00 FEET; THENCE ALONG SAID CURVE TO THE LEFT FOR AN ARC DISTANCE OF 224.62 FEET THROUGH A CENTRAL ANGLE OF 36°46'17" TO A POINT (THE LAST COURSE BEING COINCIDENT WITH THE OUTER EDGE OF PERMANENT ACCESS EASEMENT, AS RECORDED ON SAID OFFICIAL RECORD BOOK 11411, AT PAGE 1044); THENCE, N 45°00'00" E, A DISTANCE OF 109.39 FEET TO THE POINT OF BEGINNING.

TOGETHER WITH

PARCEL K3

A PORTION OF TRACT "A", MIAMI INTERNATIONAL MALL PROPERTIES, ACCORDING TO THE PLAT THEREOF, AS RECORDED IN PLAT BOOK 117 AT PAGE 84 OF THE PUBLIC RECORDS OF MIAMI-DADE COUNTY FLORIDA AND BEING MORE PARTICULARLY DESCRIBED AS FOLLOWS:

COMMENCE AT THE MOST NORTHWESTERLY CORNER OF PARCEL IV, AS DESCRIBED IN OFFICIAL RECORDS BOOK 11411 AT PAGE 1044 OF THE PUBLIC RECORDS OF MIAMI-DADE COUNTY FLORIDA; THENCE RUN SOUTH 45 DEGREES 00 MINUTES 00 SECONDS EAST, ALONG THE SOUTHWESTERLY BOUNDARY LINE OF SAID PARCEL IV, FOR A DISTANCE OF 110.32 FEET TO THE POINT OF BEGINNING OF THE FOLLOWING PARCEL OF LAND; THENCE CONTINUE SOUTH 45 DEGREES 00 MINUTES 00 SECONDS EAST, ALONG SAID SOUTHWESTERLY BOUNDARY LINE OF SAID PARCEL IV, FOR A DISTANCE OF 611.18 FEET; THENCE SOUTH 45 DEGREES 00 MINUTES 00 SECONDS WEST, ALONG THE SOUTHWESTERLY EXTENSION OF THE SOUTHEASTERLY BOUNDARY LINE OF SAID PARCEL IV, FOR A DISTANCE OF 3.67 FEET TO A POINT; SAID POINT BEARS A BEARING OF NORTH 51 DEGREES 30 MINUTES 30 SECONDS EAST FROM THE RADIUS POINT OF THE FOLLOWING DESCRIBED CIRCULAR CURVE CONCAVE TO THE SOUTHWEST, HAVING A RADIUS OF 350.00 FEET AND A CENTRAL ANGLES OF 6 DEGREES 30 MINUTES 29 SECONDS FOR AN ARC DISTANCE OF 39.76 FEET TO A POINT OF TANGENCY; THENCE NORTH 45 DEGREES 00 MINUTES 00 SECONDS WEST FOR A DISTANCE OF 571.51 FEET (LAST MENTIONED TWO COURSE BEING ALONG THE NORTHEASTERLY BOUNDARY LINE OF PERMANENT ACCESS EASEMENT, AS DESCRIBED IN OFFICIAL RECORD BOOK 11411 AT PAGE 1044 OF THE PUBLIC RECORDS OF MIAMI-DADE COUNTY FLORIDA); THENCE NORTH 45 DEGREES 00 MINUTES 00 SECONDS EAST FOR A DISTANCE OF 1.42 FEET TO THE POINT OF BEGINNING.

TOGETHER WITH

PARCEL K4

A PORTION OF TRACT "A", MIAMI INTERNATIONAL MALL PROPERTIES ACCORDING TO THE PLAT THEREOF, AS RECORDED IN PLAT BOOK 117, PAGE 84, OF THE PUBLIC RECORDS OF MIAMI-DADE COUNTY, AND BEING MORE PARTICULARLY DESCRIBED AS FOLLOWS.

COMMENCE AT THE NORTHWEST CORNER OF THE SOUTHWEST 1/4 OF SECTION 32 TOWNSHIP 53 SOUTH, RANGE 40 EAST, AS SHOWN ON SAID PLAT OF MIAMI INTERNATIONAL MALL PROPERTIES; THENCE RUN, N 89° 38' 52" E, ALONG THE NORTH LINE OF SAID SECTION 32, A DISTANCE OF 1055.97 TO THE POINT OF BEGINNING OF THE FOLLOWING DESCRIBED PARCEL OF LAND; THENCE CONTINUE, N 89° 38' 52" E, ALONG THE NORTH LINE OF SAID SECTION 32, A DISTANCE OF 446.03 TO A POINT; THENCE, S 00°21'08"E, A DISTANCE OF 13.20 FEET TO A POINT; THENCE, N 90° 00' 00" W, FOR A DISTANCE OF 272.95 FEET TO A POINT OF CURVATURE OF A CIRCULAR CURVE TO THE LEFT, CONCAVE TO THE SOUTHEAST HAVING A RADIUS OF 375.00 FEET THROUGH A CENTRAL ANGLE OF 44°59'58" FOR AN ARC OF 294.52 FEET TO A POINT OF TANGENCY; THENCE, S45°00'00"W, A DISTANCE OF 388.46 FEET (THE LAST MENTIONED THREE COURSES BEING ALONG THE NORTHEASTERLY BOUNDARY LINE OF PERMANENT ACCESS EASEMENT, AS DESCRIBED IN OFFICIAL RECORD BOOK 11411 AT PAGE 1044 OF THE PUBLIC RECORDS OF MIAMI-DADE COUNTY FLORIDA); THENCE, N45°00'00"W, A DISTANCE OF 20.00 FEET; THENCE, N45°00'00"E, A DISTANCE OF 538.58 FEET TO THE POINT OF BEGINNING (LAST MENTIONED COURSE BEING ALONG THE SOUTHEASTERLY BOUNDARY LINE OF PARCEL VI-E AND ITS SOUTHWESTERLY EXTENSION, AS DESCRIBED IN OFFICIAL RECORD BOOK 11638, AT PAGE 1229 OF THE PUBLIC RECORDS OF MIAMI-DADE COUNTY FLORIDA).

TOGETHER WITH

PARCEL K5

A PORTION OF TRACT "A", MIAMI INTERNATIONAL MALL PROPERTIES ACCORDING TO THE PLAT THEREOF, AS RECORDED IN PLAT BOOK 117, PAGE 84, OF THE PUBLIC RECORDS OF MIAMI-DADE COUNTY, AND BEING MORE PARTICULARLY DESCRIBED AS FOLLOWS.

COMMENCE AT THE NORTHEAST CORNER OF SAID TRACT "A", AS SHOWN ON SAID PLAT OF MIAMI INTERNATIONAL MALL PROPERTIES; THENCE RUN, S01°43'13"E, ALONG THE EASTERLY LINE OF SAID TRACT "A", A DISTANCE OF 761.46 FEET TO THE POINT OF BEGINNING OF THE FOLLOWING DESCRIBED PARCEL OF LAND; THENCE CONTINUE, S01°43'13"E, ALONG THE EASTERLY LINE OF SAID TRACT "A", A DISTANCE OF 458.78 FEET TO A POINT; THENCE, S88°16'47"W, A DISTANCE OF 10.00 FEET TO A POINT; THENCE, N01°43'13"W, ALONG THE EASTERLY BOUNDARY LINE OF PERMANENT ACCESS EASEMENT, AS DESCRIBED IN OFFICIAL RECORD BOOK 11411 AT PAGE 1044 OF THE PUBLIC RECORDS OF MIAMI-DADE COUNTY FLORIDA, A DISTANCE 458.78 FEET TO A POINT; THENCE, N88°16'47"E, A DISTANCE OF 10.00 FEET TO THE POINT OF BEGINNING.

TOGETHER WITH

A PORTION OF ACCESS EASEMENT (RING ROAD)

A PORTION OF PERMANENT ACCESS EASEMENT, AS SHOWN IN OFFICIAL RECORD BOOK 11411, AT PAGE 1044 OF THE PUBLIC RECORDS OF MIAMI-DADE COUNTY, BOUNDED ON THE WEST BY A LINE PERPENDICULAR TO AND 29.00 FEET NORTHEASTERLY FROM THE MOST WESTERLY CORNER OF SEARS SITE (SAID DISTANCE BEING ALONG THE SOUTHEASTERLY LINE OF PERMANENT ACCESS EASEMENT) AND BOUNDED ON THE EAST BY A PERPENDICULAR LINE TO SAID PERMANENT ACCESS EASEMENT AT THE MOST SOUTHEASTERLY CORNER OF SAID JC PENNY SITE.

SURVEYOR'S CERTIFICATION:

I HEREBY CERTIFY THAT THIS "BOUNDARY SURVEY" OF THE PROPERTY DESCRIBED HEREON IS TRUE AND CORRECT TO THE BEST OF MY KNOWLEDGE AND BELIEF AS RECENTLY SURVEYED AND DRAWN UNDER MY SUPERVISION AND DIRECTION. THIS SURVEY COMPLIES WITH STANDARDS OF PRACTICE REQUIREMENTS ADOPTED BY THE FLORIDA STATE BOARD OF SURVEYORS AND MAPPERS PURSUANT TO CHAPTER 5J-17, FLORIDA ADMINISTRATIVE CODE.

THIS CERTIFICATION DOES NOT EXTEND TO ANY UNNAMED PARTIES.

BY:______________________
JOSE G. HERNANDEZ, PRESIDENT
PROFESSIONAL LAND SURVEYOR No. 6952
STATE OF FLORIDA.

THE ELECTRONIC SEAL AND SIGNATURE APPEARING ON THIS SURVEY WAS AUTHORIZED BY JOSE G. HERNANDEZ, PROFESSIONAL LAND SURVEYOR NO. 6952 OF THE STATE OF FLORIDA ON MARCH 24, 2026.

THIS IS A BOUNDARY SURVEY
PROJECT NUMBER: MD-730

\\JHA-01\JHA Drafting\JHA Drawings\Miami-Dade\325340\DORAL INTERNATIONAL\SURVEY\DORAL INTERNATIONAL - BOUNDARY SURVEY - OPTION 2 - W_KNUCLES K1-K2-K3-K4-K5 - 20260323.dwg

BOUNDARY SURVEY

FIELD SURVEY WAS COMPLETED ON: APRIL 29, 2025 AND UPDATED ON SEPTEMBER 23, 2025.

LEGEND AND ABBREVIATIONS

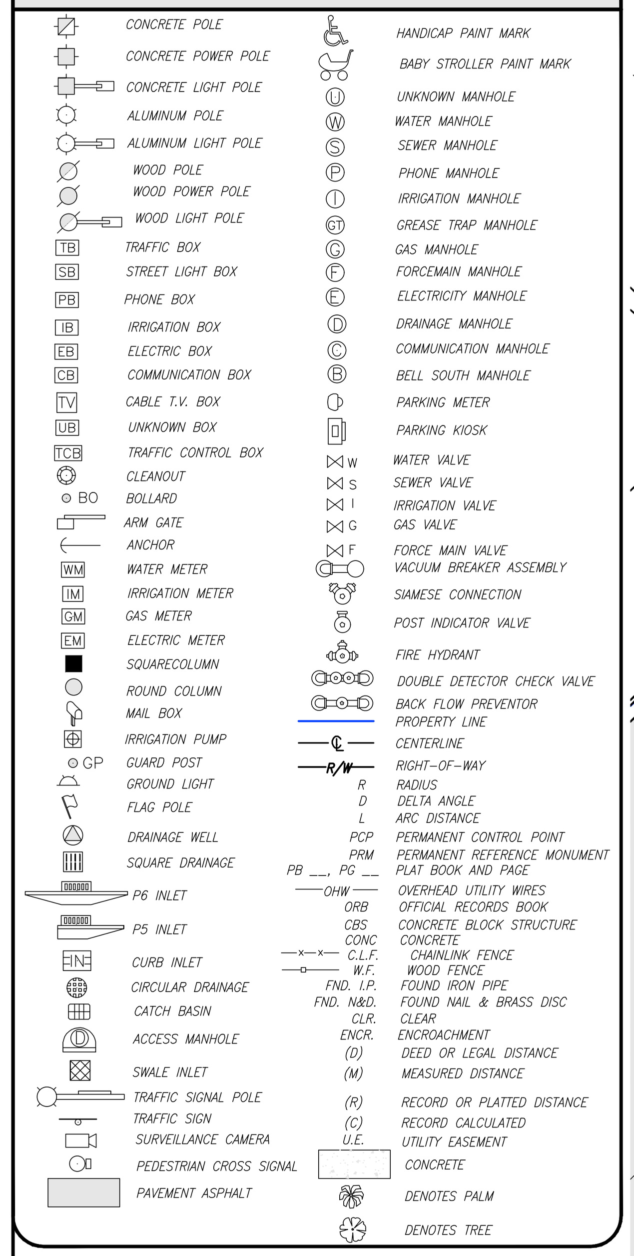

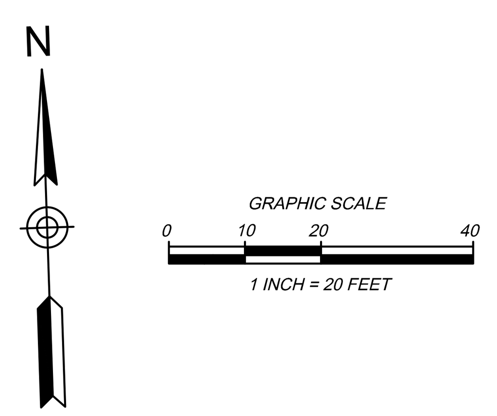

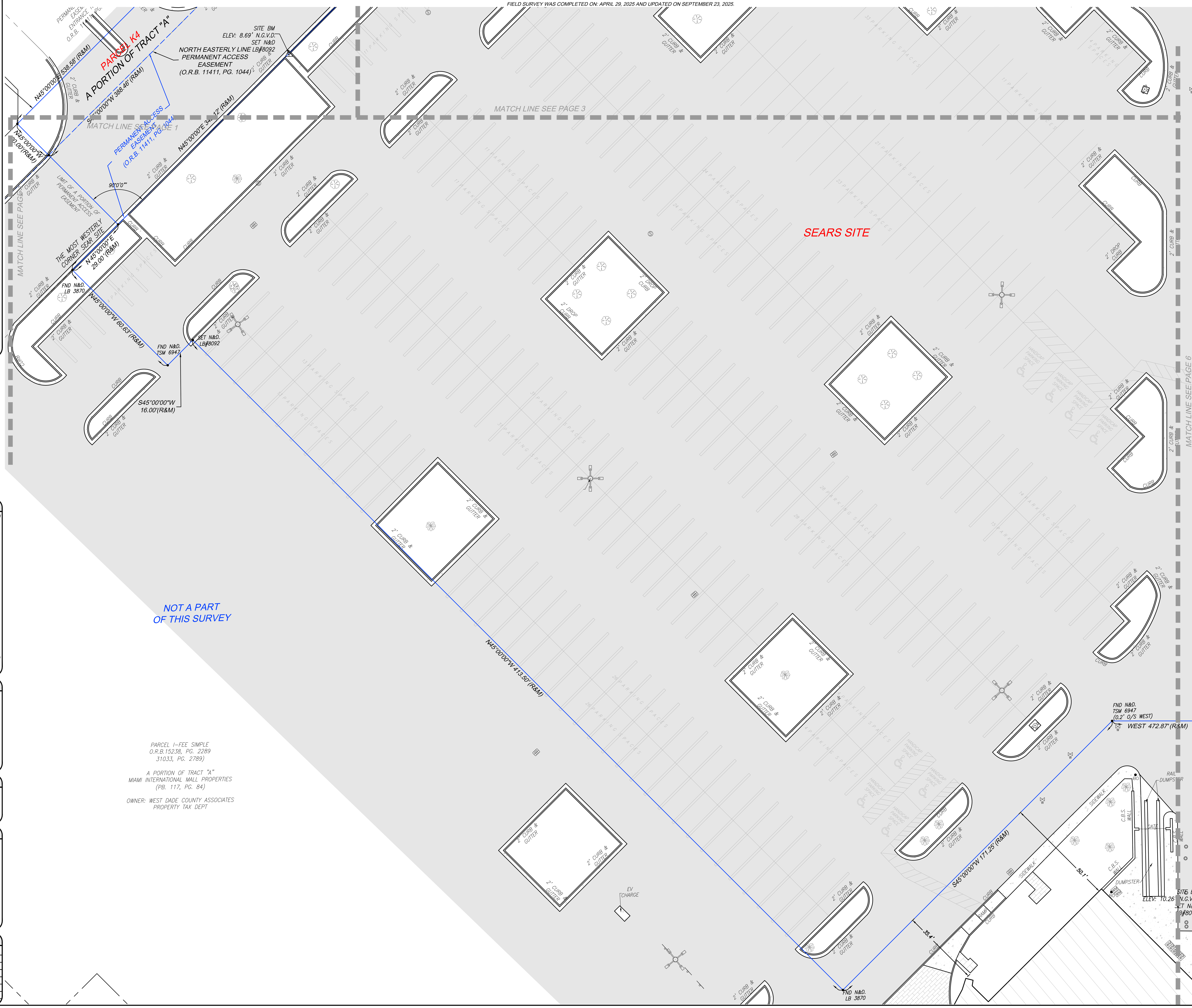

SURVEYOR'S NOTES

1. FIELD SURVEY WAS COMPLETED ON: APRIL 29, 2025 AND UPDATED ON SEPTEMBER 22, 2025.
2. LEGAL DESCRIPTION WAS PROVIDED BY THE CLIENT
3. SUBJECT PROPERTY AREA:
   SEARS SITE: 565,951 sq.ft. (12.992 Acres)
   PARCEL #1 - JC PENNY SITE : 419,055 sq.ft. (9.620 Acres)
   PARCEL K1: 6,276 sq.ft (0.144 Acres)
   PARCEL K2: 9.734 sq.ft (0.223 Acres)
   PARCEL K3: 897 SQ.FT. (0.021 ACRES)
   PARCEL K4: 19,036 SQ.FT. (0.437 ACRES)
   PARCEL K5: 4,414 SQ.FT. (0.101 ACRES)
   A PORTION OF PERMANENT ACCESS EASEMENT:
   90,340 SQ.FT. (2.074 ACRES)
4. BEARINGS BASED ON AN ASSUMED BEARING OF EAST ALONG THE NORTH LINE OF SUBJECT PROPERTY SITE #1.
5. DISTANCES ALONG BOUNDARY LINES, AS SHOWN HEREON, ARE RECORD AND/OR MEASURED UNLESS OTHERWISE NOTED.
6. INTERIOR LOT LINES, AS SHOWN HEREON, ARE FOR INFORMATIONAL PURPOSE ONLY, UNLESS OTHERWISE NOTED.
7. UNDERGROUND FOOTINGS, FOUNDATIONS AND HAVE NOT BEEN LOCATED AT THE TIME OF THIS SURVEY, UNLESS OTHERWISE NOTED.
8. ABOVEGROUND AND/OR VISIBLE UTILITIES HAVE BEEN LOCATED AT THE TIME OF THIS SURVEY, UNLESS OTHERWISE NOTED.
9. SUBJECT PROPERTY HAS A DIRECT PHYSICAL ACCESS TO AND FROM PERMANENT ACCESS EASEMENT.
10. THE SURVEYOR DOES NOT DETERMINE FENCE AND/OR WALL OWNERSHIP.
11. THERE IS A GAP BETWEEN SEARS SITE AND PERMANENT ACCESS EASEMENT.
12. THIS BOUNDARY SURVEY IS SUBJECT TO EASEMENTS, RIGHTS-OF-WAY AND OTHER MATTERS THAT MIGHT BE REFLECTED ON A SEARCH OF TITLE OF THE SUBJECT PROPERTY.

PROPERTY INFORMATION

SEARS SITE

- PROPERTY ADDRESS: 1625 NW 107th AVE
  CITY OF DORAL , MIAMI-DADE, FL 33172
- PARCEL ID : 35-3032-008-0050

JC PENNY SITE

- PROPERTY ADDRESS: 1603 NW 107th AVE
  CITY OF DORAL , MIAMI-DADE, FL 33172
- PARCEL ID : 35-3032-008-0140

CERTIFY TO:

- GREYSTAR DEVELOPMENT EAST, LLC, A DELAWARE LIMITED LIABILITY COMPANY
- FIRST AMERICAN TITLE INSURANCE COMPANY
- GREENBERG TRAURIG, PA

POSSIBLE ENCROACHMENTS

- PARCEL K3 - POSSIBLE ENCROACHMENTS
- A PORTION OF CHAIN LINK FENCE, ALONG THE EAST BOUNDARY LINE, ENCROACH 0.7' FROM ADJOINING LAND ONTO SUBJECT PROPERTY. (SEE PAGE 13)
- A PORTION OF TEMPORARY CHAIN LINK FENCE, ALONG THE SOUTHWESTERLY BOUNDARY LINE, ENCROACH 1.7' FROM SUBJECT PROPERTY ONTO PERMANENT ACCESS EASEMENT. (SEE PAGE 12)

REVISIONS

DATE	JOB No.	REV.	BY:
05/27/25	155116	UPDATE TITLE OF COMMITMENT	C.A.F.
09/23/25	155443-5 / 155116 (overprinted)	UPDATE BOUNDARY SURVEY	C.A.F.
06/11/25	155443-5	UPDATE BOUNDARY SURVEY	C.A.F.

BOUNDARY SURVEY

PREPARED FOR:

GREYSTAR DEVELOPMENT EAST, LLC

LYING AND BEING IN SECTION 32, TOWNSHIP 53 SOUTH, RANGE 40 EAST CITY OF DORAL, MIAMI-DADE COUNTY, FLORIDA.

J.Hernandez & Associates Inc
LAND SURVEYORS AND MAPPERS
CERTIFICATE OF AUTHORIZATION No. LB8092
3300 NW 112th AVE. SUITE #10, DORAL, FL 33172
(P) 305-526-0606 (E) info@jhasurveys.com

DRAWN BY: C.A.F.	CHECKED BY: J.G.H.	JOB NUM: 155116
DATE: 05/01/2025	DATE: 05/01/2025	F.B.: MD-80, PG. 30

LEGAL DESCRIPTION

SEARS SITE

A PARCEL OF LAND LOCATED WITHIN SECTION 32, TOWNSHIP 53 SOUTH, RANGE 40 EAST, LYING AND BEING IN DADE COUNTY, FLORIDA AND FURTHER BOUNDED AND DESCRIBED AS FOLLOWS:

BEGINNING AT A PIPE IN CONCRETE MARKING THE SOUTHWEST CORNER OF SAID SECTION 32, THENCE N 1° 43' 13" W, ALONG THE WEST LINE OF SAID SECTION 32, A DISTANCE OF 2644.15 FEET TO A POINT; THENCE N 89° 38' 52" E, A DISTANCE OF 1228.85 FEET TO A POINT; THENCE S 0° 21' 08" E, A DISTANCE OF 46.51 FEET TO THE PRINCIPAL POINT AND PLACE OF BEGINNING OF THE FOLLOWING DESCRIPTION:

THENCE DUE EAST, A DISTANCE OF 280.00 FEET TO A POINT; THENCE 247.40 FEET ALONG AN ARC TO THE RIGHT, HAVING A RADIUS OF 315.00 FEET AND A CHORD OF 241.09 FEET, BEARING S 67° 30' 00" E TO A POINT; THENCE S 45° 00' 00" E, A DISTANCE OF 297.19 FEET TO A POINT; THENCE S 45° 00' 00" W, A DISTANCE OF 426.52 FEET TO A POINT; THENCE DUE WEST, A DISTANCE OF 472.87 FEET TO A POINT; THENCE S 45° 00' 00" W, A DISTANCE OF 171.25 FEET TO A POINT; THENCE N 45° 00' 00" W, A DISTANCE OF 413.50 FEET TO A POINT; THENCE S 45° 00' 00" W, A DISTANCE OF 16.00 FEET TO A POINT; THENCE N 45° 00' 00" W, A DISTANCE OF 60.63 FEET TO A POINT; THENCE N 45° 00' 00" E, A DISTANCE OF 342.12 FEET TO A POINT; THENCE N 38° 11' 22.8" E, A DISTANCE OF 75.89 FEET TO A POINT; THENCE 267.04 FEET ALONG AN ARC TO THE RIGHT, HAVING A RADIUS OF 340.00 FEET AND A CHORD OF 260.22 FEET, BEARING N 67° 30' 00" E TO THE PRINCIPAL POINT AND PLACE OF BEGINNING.

TOGETHER WITH

JC PENNY SITE
PARCEL 1

A PART OF TRACT A, MIAMI INTERNATIONAL MALL PROPERTIES, ACCORDING TO THE PLAT RECORDED IN PLAT BOOK 117, PAGE 84, PUBLIC RECORDS OF MIAMI-DADE COUNTY, FLORIDA, AND FURTHER BOUNDED AND DESCRIBED AS FOLLOWS:

BEGINNING AT A PIPE IN CONCRETE MARKING THE SOUTHWEST COMER OF SAID SECTION 32, TOWNSHIP 53 SOUTH, RANGE 40 EAST; THENCE NORTH 89° 20' 55" EAST ALONG THE SOUTH LINE OF SECTION 32, A DISTANCE OF 2250.00 FEET TO A POINT; THENCE NORTH 01° 43' 13" WEST A DISTANCE OF 1149.03 FEET TO A POINT; THENCE SOUTH 88° 16' 47" WEST A DISTANCE OF 45.00 FEET TO A POINT; THENCE NORTH 01° 43' 13" WEST A DISTANCE OF 263.14 FEET TO A POINT, SAID POINT BEING THE PRINCIPAL POINT AND PLACE OF BEGINNING OF THE FOLLOWING DESCRIPTION: THENCE DUE WEST A DISTANCE OF 244.73 FEET TO A POINT; THENCE DUE NORTH A DISTANCE OF 102.00 FEET TO A POINT; THENCE DUE WEST A DISTANCE OF 432.00 FEET TO A POINT; THENCE DUE NORTH A DISTANCE OF 386.97 FEET TO A POINT; THENCE NORTH 45° 00' 00" EAST A DISTANCE OF 532.98 FEET TO A POINT; THENCE SOUTH 45° 00' 00" EASI A DISTANCE OF 274.31 FEET TO A POINT; THENCE 237.94 FEET ALONG AN ARC TO THE RIGHT, HAVING A RADIUS OF 315.00 FEET AND A CENTRAL ANGLE OF 43° 16' 47" TO A POINT; THENCE SOUTH 01°43' 13" EAST A DISTANCE OF 458.80 FEET TO A POINT, SAID POINT BEING THE PRINCIPAL POINT AND PLACE OF BEGINNING.

PARCEL 2

EASEMENT RIGHTS AS SET FORTH IN THE MIAMI INTERNATIONAL MALL EASEMENT AND OPERATING AGREEMENT BY AND AMONG SEARS, ROEBUCK AND CO .; ALSTORES REALTY CORPORATION; JORDAN MARSH COMPANY; FEDERATED DEPARTMENT STORES, INC .; ASSOCIATED DRY GOOD CORPORATION; AND WEST DADE COUNTY ASSOCIATES RECORDED APRIL 15, 1982 IN OFFICIAL RECORDS BOOK 11411, PAGE 1044: AS AFFECTED BY FIRST AMENDMENT TO EASEMENT AND OPERATING AGREEMENT BY AND BETWEEN SEARS, ROEBUCK AND CO .; ALLIED STORES GENERAL REAL ESTATE COMPANY; MAAS, INC .: BURDINE'S REAL ESTATE, INC .; J.C. PENNEY COMPANY, INC .; MERVYN'S; AND WEST DADE COUNTY ASSOCIATES, RECORDED OCTOBER 22, 1991 IN OFFICIAL RECORDS BOOK 15238, PAGE 2289; AND BY SECOND AMENDMENT TO EASEMENT AND OPERATING AGREEMENT BY AND BETWEEN SERITAGE SRC FINANCE LLC; MACY'S FLORIDA STORES, LLC; J.C. PENNEY CORPORATION, INC .; KOHL'S DEPARTMENT STORES, INC .; AND WEST DADE COUNTY ASSOCIATES RECORDED AUGUST 30, 2017 IN OFFICIAL RECORDS BOOK 30674, PAGE 1502; AND BY THIRD AMENDMENT TO EASEMENT AND OPERATING AGREEMENT BY AND BETWEEN SERITAGE SRC FINANCE LLC; MACY'S FLORIDA STORES, LLC; J.C. PENNEY CORPORATION, INC .; KOHL'S DEPARTMENT STORES, INC .; AND WEST DADE COUNTY ASSOCIATES RECORDED NOVEMBER 9, 2017 IN OFFICIAL RECORDS BOOK 30752, PAGE 434; AND BY FOURTH AMENDMENT TO EASEMENT AND OPERATING AGREEMENT RECORDED DECEMBER 8, 2017 IN OFFICIAL RECORDS BOOK 30785, PAGE 3451; AND BY FIFTH AMENDMENT TO EASEMENT AND OPERATING AGREEMENT BY AND BETWEEN SERITAGE SRC FINANCE LLC; MACY'S FLORIDA STORES, LLC; J.C. PENNEY CORPORATION, INC .; KOHL'S DEPARTMENT STORES, INC .; AND WEST DADE COUNTY ASSOCIATES RECORDED JUNE 21, 2018 IN OFFICIAL RECORDS BOOK 31023, PAGE 4347, PUBLIC RECORDS OF MIAMI-DADE COUNTY, FLORIDA.

TOGETHER WITH

PARCEL K1

A PORTION OF TRACT "A", MIAMI INTERNATIONAL MALL PROPERTIES ACCORDING TO THE PLAT THEREOF, AS RECORDED IN PLAT BOOK 117, PAGE 84, OF THE PUBLIC RECORDS OF MIAMI-DADE COUNTY, AND BEING MORE PARTICULARLY DESCRIBED AS FOLLOWS.

BEGINNING AT A PIPE IN CONCRETE MARKING THE SOUTHWEST CORNER OF SAID SECTION 32, THENCE N 1° 43' 13" W, ALONG THE WEST LINE OF SAID SECTION 32, A DISTANCE OF 2644.15 FEET TO A POINT; THENCE N 89° 38' 52" E, A DISTANCE OF 1502.00 FEET TO THE POINT OF BEGINNING OF THE FOLLOWING DESCRIBED PARCEL OF LAND; THENCE CONTINUE, N 89° 38' 52" E, A DISTANCE OF 215.66 FEET; THENCE, S 45° 00' 00" W, A DISTANCE OF 53.79 FEET TO A POINT; THENCE, S 45° 00' 00" E, A DISTANCE OF 110.32 FEET TO A POINT; THENCE, S 45° 00' 00" W, A DISTANCE OF 1.42 FEET TO A NON-TANGENT POINT; SAID POINT BEARS OF N 45° 00' 00" E FROM RADIUS POINT OF THE FOLLOWING DESCRIBED CIRCULAR CURVE CONCAVE TO THE SOUTHWEST AND HAVING A RADIUS OF 350.00 FEET; THENCE ALONG SAID CURVE TO THE LEFT FOR AN ARC DISTANCE OF 274.89 FEET THROUGH A CENTRAL ANGLE OF 45°00'00" TO A POINT OF TANGENCY; THENCE, N 90° 00' 00" W, FOR A DISTANCE OF 7.05 FEET TO A POINT (THE LAST TWO COURSES BEING CONCIDENT WITH THE OUTER EDGE OF PERMANENT ACCESS EASEMENT, AS RECORDED IN OFFICIAL RECORD BOOK 11411, AT PAGE 1044, OF THE PUBLIC RECORDS OF MIAMI-DADE COUNTY); THENCE, N 00° 21' 08" W, FOR A DISTANCE OF 13.20 FEET TO THE POINT OF BEGINNING.

TOGETHER WITH

PARCEL K2

A PORTION OF TRACT "A", MIAMI INTERNATIONAL MALL PROPERTIES ACCORDING TO THE PLAT THEREOF, AS RECORDED IN PLAT BOOK 117, PAGE 84, OF THE PUBLIC RECORDS OF MIAMI-DADE COUNTY, AND BEING MORE PARTICULARLY DESCRIBED AS FOLLOWS.

BEGINNING AT A PIPE IN CONCRETE MARKING THE SOUTHWEST CORNER OF SAID SECTION 32, THENCE N 1° 43' 13" W, ALONG THE WEST LINE OF SAID SECTION 32, A DISTANCE OF 2644.15 FEET TO A POINT; THENCE N 89° 38' 52" E, A DISTANCE OF 1717.66 FEET TO A POINT (ALSO KNOWN AS PRINCIPAL POINT); THENCE CONTINUE, N 89° 38' 52" E, A DISTANCE OF 532.59 FEET TO A POINT; THENCE, S 01° 43' 13" E, A DISTANCE OF 476.94 FEET TO THE POINT OF BEGINNING OF THE FOLLOWING DESCRIBED PARCEL OF LAND; THENCE CONTINUE, S 01° 43' 13" E, A DISTANCE OF 284.52 FEET TO A POINT; THENCE, S 88° 16' 47" W, A DISTANCE OF 10.00 FEET TO A POINT OF NON-TANGENT; SAID POINT BEARS OF N 88° 16' 47" E FROM RADIUS POINT OF THE FOLLOWING DESCRIBED CIRCULAR CURVE CONCAVE TO THE SOTHWEST AND HAVING A RADIUS OF 350.00 FEET; THENCE ALONG SAID CURVE TO THE LEFT FOR AN ARC DISTANCE OF 224.62 FEET THROUGH A CENTRAL ANGLE OF 36°46'17" TO A POINT (THE LAST COURSE BEING COINCIDENT WITH THE OUTER EDGE OF PERMANENT ACCESS EASEMENT, AS RECORDED ON SAID OFFICIAL RECORD BOOK 11411, AT PAGE 1044); THENCE, N 45°00'00" E, A DISTANCE OF 109.39 FEET TO THE POINT OF BEGINNING.

TOGETHER WITH

PARCEL K3

A PORTION OF TRACT "A", MIAMI INTERNATIONAL MALL PROPERTIES, ACCORDING TO THE PLAT THEREOF, AS RECORDED IN PLAT BOOK 117 AT PAGE 84 OF THE PUBLIC RECORDS OF MIAMI-DADE COUNTY FLORIDA AND BEING MORE PARTICULARLY DESCRIBED AS FOLLOWS:

COMMENCE AT THE MOST NORTHWESTERLY CORNER OF PARCEL IV, AS DESCRIBED IN OFFICIAL RECORDS BOOK 11411 AT PAGE 1044 OF THE PUBLIC RECORDS OF MIAMI-DADE COUNTY FLORIDA; THENCE RUN SOUTH 45 DEGREES 00 MINUTES 00 SECONDS EAST, ALONG THE SOUTHWESTERLY BOUNDARY LINE OF SAID PARCEL IV, FOR A DISTANCE OF 110.32 FEET TO THE POINT OF BEGINNING OF THE FOLLOWING PARCEL OF LAND; THENCE CONTINUE SOUTH 45 DEGREES 00 MINUTES 00 SECONDS EAST, ALONG SAID SOUTHWESTERLY BOUNDARY LINE OF SAID PARCEL IV, FOR A DISTANCE OF 611.18 FEET; THENCE SOUTH 45 DEGREES 00 MINUTES 00 SECONDS WEST, ALONG THE SOUTHWESTERLY EXTENSION OF THE SOUTHEASTERLY BOUNDARY LINE OF SAID PARCEL IV, FOR A DISTANCE OF 3.67 FEET TO A POINT; SAID POINT BEARS A BEARING OF NORTH 51 DEGREES 30 MINUTES 30 SECONDS EAST FROM THE RADIUS POINT OF THE FOLLOWING DESCRIBED CIRCULAR CURVE CONCAVE TO THE SOUTHWEST, HAVING A RADIUS OF 350.00 FEET AND A CENTRAL ANGLES OF 6 DEGREES 30 MINUTES 29 SECONDS FOR AN ARC DISTANCE OF 39.76 FEET TO A POINT OF TANGENCY; THENCE NORTH 45 DEGREES 00 MINUTES 00 SECONDS WEST FOR A DISTANCE OF 571.51 FEET (LAST MENTIONED TWO COURSE BEING ALONG THE NORTHEASTERLY BOUNDARY LINE OF PERMANENT ACCESS EASEMENT, AS DESCRIBED IN OFFICIAL RECORD BOOK 11411 AT PAGE 1044 OF THE PUBLIC RECORDS OF MIAMI-DADE COUNTY FLORIDA); THENCE NORTH 45 DEGREES 00 MINUTES 00 SECONDS EAST FOR A DISTANCE OF 1.42 FEET TO THE POINT OF BEGINNING.

TOGETHER WITH

PARCEL K4

A PORTION OF TRACT "A", MIAMI INTERNATIONAL MALL PROPERTIES ACCORDING TO THE PLAT THEREOF, AS RECORDED IN PLAT BOOK 117, PAGE 84, OF THE PUBLIC RECORDS OF MIAMI-DADE COUNTY, AND BEING MORE PARTICULARLY DESCRIBED AS FOLLOWS.

COMMENCE AT THE NORTHWEST CORNER OF THE SOUTHWEST 1/4 OF SECTION 32 TOWNSHIP 53 SOUTH, RANGE 40 EAST, AS SHOWN ON SAID PLAT OF MIAMI INTERNATIONAL MALL PROPERTIES; THENCE RUN, N 89° 38' 52" E, ALONG THE NORTH LINE OF SAID SECTION 32, A DISTANCE OF 1055.97 TO THE POINT OF BEGINNING OF THE FOLLOWING DESCRIBED PARCEL OF LAND; THENCE CONTINUE, N 89° 38' 52" E, ALONG THE NORTH LINE OF SAID SECTION 32, A DISTANCE OF 446.03 TO A POINT; THENCE, S 00°21'08"E, A DISTANCE OF 13.20 FEET TO A POINT; THENCE, N 90° 00' 00" W, FOR A DISTANCE OF 272.95 FEET TO A POINT OF CURVATURE OF A CIRCULAR CURVE TO THE LEFT, CONCAVE TO THE SOUTHEAST HAVING A RADIUS OF 375.00 FEET THROUGH A CENTRAL ANGLE OF 44°59'58" FOR AN ARC OF 294.52 FEET TO A POINT OF TANGENCY; THENCE, S45°00'00"W, A DISTANCE OF 388.46 FEET (THE LAST MENTIONED THREE COURSES BEING ALONG THE NORTHEASTERLY BOUNDARY LINE OF PERMANENT ACCESS EASEMENT, AS DESCRIBED IN OFFICIAL RECORD BOOK 11411 AT PAGE 1044 OF THE PUBLIC RECORDS OF MIAMI-DADE COUNTY FLORIDA); THENCE, N45°00'00"W, A DISTANCE OF 20.00 FEET; THENCE, N45°00'00"E, A DISTANCE OF 538.58 FEET TO THE POINT OF BEGINNING (LAST MENTIONED COURSE BEING ALONG THE SOUTHEASTERLY BOUNDARY LINE OF PARCEL VI-E AND ITS SOUTHWESTERLY EXTENSION, AS DESCRIBED IN OFFICIAL RECORD BOOK 11638, AT PAGE 1229 OF THE PUBLIC RECORDS OF MIAMI-DADE COUNTY FLORIDA).

TOGETHER WITH

PARCEL K5

A PORTION OF TRACT "A", MIAMI INTERNATIONAL MALL PROPERTIES ACCORDING TO THE PLAT THEREOF, AS RECORDED IN PLAT BOOK 117, PAGE 84, OF THE PUBLIC RECORDS OF MIAMI-DADE COUNTY, AND BEING MORE PARTICULARLY DESCRIBED AS FOLLOWS.

COMMENCE AT THE NORTHEAST CORNER OF SAID TRACT "A", AS SHOWN ON SAID PLAT OF MIAMI INTERNATIONAL MALL PROPERTIES; THENCE RUN, S01°43'13"E, ALONG THE EASTERLY LINE OF SAID TRACT "A", A DISTANCE OF 761.46 FEET TO THE POINT OF BEGINNING OF THE FOLLOWING DESCRIBED PARCEL OF LAND; THENCE CONTINUE, S01°43'13"E, ALONG THE EASTERLY LINE OF SAID TRACT "A", A DISTANCE OF 458.78 FEET TO A POINT; THENCE, S88°16'47"W, A DISTANCE OF 10.00 FEET TO A POINT; THENCE, N01°43'13"W, ALONG THE EASTERLY BOUNDARY LINE OF PERMANENT ACCESS EASEMENT, AS DESCRIBED IN OFFICIAL RECORD BOOK 11411 AT PAGE 1044 OF THE PUBLIC RECORDS OF MIAMI-DADE COUNTY FLORIDA, A DISTANCE 458.78 FEET TO A POINT; THENCE, N88°16'47"E, A DISTANCE OF 10.00 FEET TO THE POINT OF BEGINNING.

TOGETHER WITH

A PORTION OF ACCESS EASEMENT (RING ROAD)

A PORTION OF PERMANENT ACCESS EASEMENT, AS SHOWN IN OFFICIAL RECORD BOOK 11411, AT PAGE 1044 OF THE PUBLIC RECORDS OF MIAMI-DADE COUNTY, BOUNDED ON THE WEST BY A LINE PERPENDICULAR TO AND 29.00 FEET NORTHEASTERLY FROM THE MOST WESTERLY CORNER OF SEARS SITE (SAID DISTANCE BEING ALONG THE SOUTHEASTERLY LINE OF PERMANENT ACCESS EASEMENT) AND BOUNDED ON THE EAST BY A PERPENDICULAR LINE TO SAID PERMANENT ACCESS EASEMENT AT THE MOST SOUTHEASTERLY CORNER OF SAID JC PENNY SITE.

SURVEYOR'S CERTIFICATION:

I HEREBY CERTIFY THAT THIS "BOUNDARY SURVEY" OF THE PROPERTY DESCRIBED HEREON IS TRUE AND CORRECT TO THE BEST OF MY KNOWLEDGE AND BELIEF AS RECENTLY SURVEYED AND DRAWN UNDER MY SUPERVISION AND DIRECTION. THIS SURVEY COMPLIES WITH STANDARDS OF PRACTICE REQUIREMENTS ADOPTED BY THE FLORIDA STATE BOARD OF SURVEYORS AND MAPPERS PURSUANT TO CHAPTER 5J-17, FLORIDA ADMINISTRATIVE CODE.

THIS CERTIFICATION DOES NOT EXTEND TO ANY UNNAMED PARTIES.

BY: ______________________

JOSE G. HERNANDEZ, PRESIDENT
PROFESSIONAL LAND SURVEYOR No. 6952
STATE OF FLORIDA.

THE ELECTRONIC SEAL AND SIGNATURE APPEARING ON THIS SURVEY WAS AUTHORIZED BY JOSE G. HERNANDEZ, PROFESSIONAL LAND SURVEYOR NO. 6952 OF THE STATE OF FLORIDA ON MARCH 24, 2026.

THIS IS A BOUNDARY SURVEY

PROJECT NUMBER: MD-730

BOUNDARY SURVEY

FIELD SURVEY WAS COMPLETED ON: APRIL 29, 2025 AND UPDATED ON SEPTEMBER 23, 2025.

LEGEND AND ABBREVIATIONS

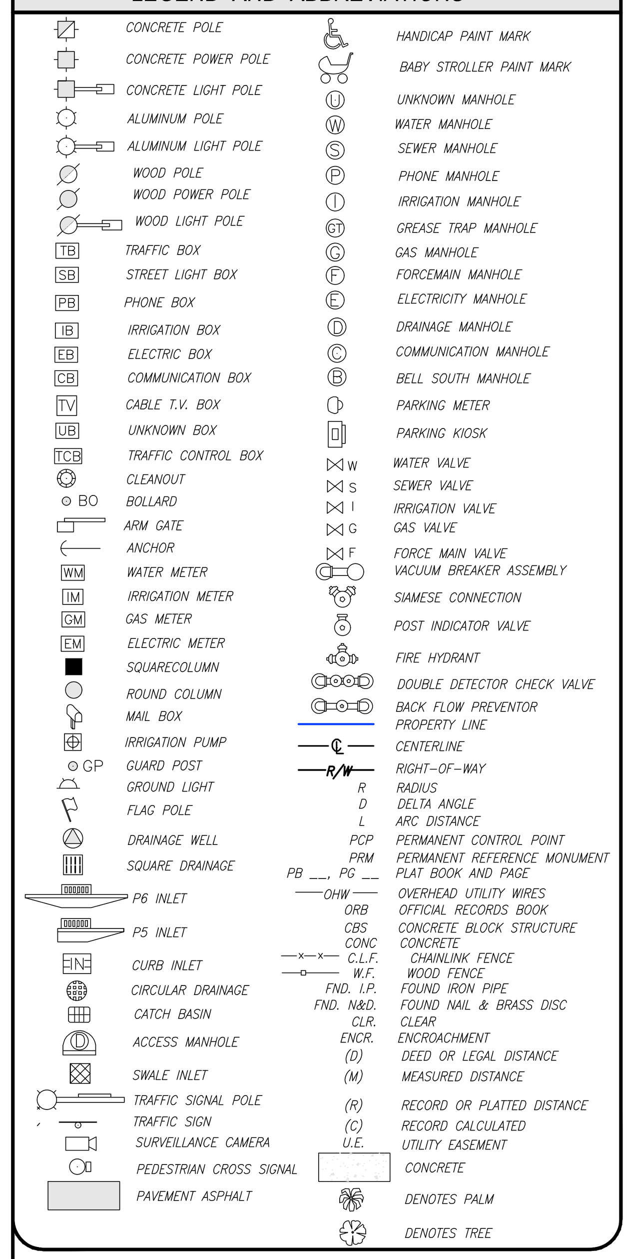

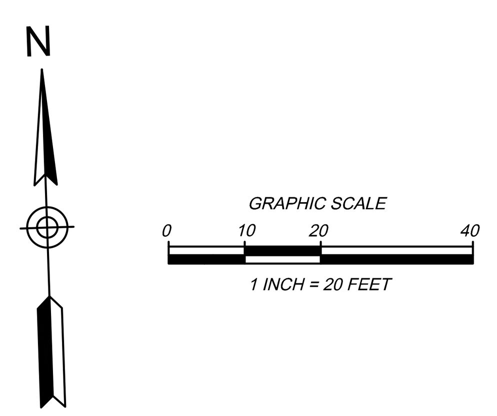

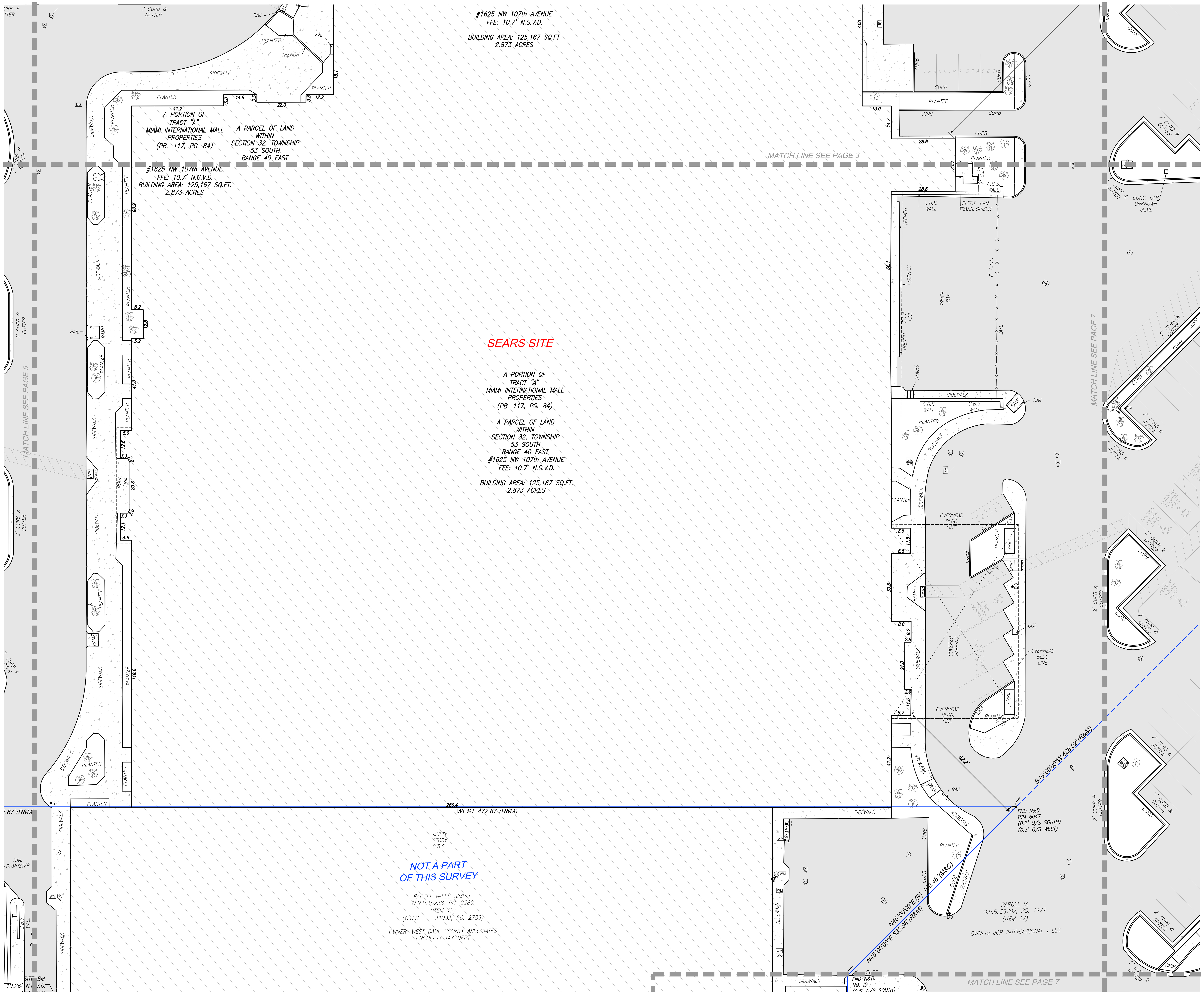

SURVEYOR'S NOTES

1. FIELD SURVEY WAS COMPLETED ON: APRIL 29, 2025 AND UPDATED ON SEPTEMBER 22, 2025.
2. LEGAL DESCRIPTION WAS PROVIDED BY THE CLIENT
3. SUBJECT PROPERTY AREA:
   SEARS SITE: 565,951 sq.ft. (12.992 Acres)
   PARCEL #1 - JC PENNY SITE : 419,055 sq.ft. (9.620 Acres)
   PARCEL K1: 6,276 sq.ft (0.144 Acres)
   PARCEL K2: 9.734 sq.ft (0.223 Acres)
   PARCEL K3: 897 SQ.FT. (0.021 ACRES)
   PARCEL K4: 19,036 SQ.FT. (0.437 ACRES)
   PARCEL K5: 4,414 SQ.FT. (0.101 ACRES)
   A PORTION OF PERMANENT ACCESS EASEMENT:
   90,340 SQ.FT. (2.074 ACRES)
4. BEARINGS BASED ON AN ASSUMED BEARING OF EAST ALONG THE NORTH LINE OF SUBJECT PROPERTY SITE #1.
5. DISTANCES ALONG BOUNDARY LINES, AS SHOWN HEREON, ARE RECORD AND/OR MEASURED UNLESS OTHERWISE NOTED.
6. INTERIOR LOT LINES, AS SHOWN HEREON, ARE FOR INFORMATIONAL PURPOSE ONLY, UNLESS OTHERWISE NOTED.
7. UNDERGROUND FOOTINGS, FOUNDATIONS AND HAVE NOT BEEN LOCATED AT THE TIME OF THIS SURVEY, UNLESS OTHERWISE NOTED.
8. ABOVEGROUND AND/OR VISIBLE UTILITIES HAVE BEEN LOCATED AT THE TIME OF THIS SURVEY, UNLESS OTHERWISE NOTED.
9. SUBJECT PROPERTY HAS A DIRECT PHYSICAL ACCESS TO AND FROM PERMANENT ACCESS EASEMENT.
10. THE SURVEYOR DOES NOT DETERMINE FENCE AND/OR WALL OWNERSHIP.
11. THERE IS A GAP BETWEEN SEARS SITE AND PERMANENT ACCESS EASEMENT.
12. THIS BOUNDARY SURVEY IS SUBJECT TO EASEMENTS, RIGHTS-OF-WAY AND OTHER MATTERS THAT MIGHT BE REFLECTED ON A SEARCH OF TITLE OF THE SUBJECT PROPERTY.

PROPERTY INFORMATION

SEARS SITE

- PROPERTY ADDRESS: 1625 NW 107th AVE
  CITY OF DORAL , MIAMI-DADE, FL 33172
- PARCEL ID : 35-3032-008-0050

JC PENNY SITE

- PROPERTY ADDRESS: 1603 NW 107th AVE
  CITY OF DORAL , MIAMI-DADE, FL 33172
- PARCEL ID : 35-3032-008-0140

CERTIFY TO:

- GREYSTAR DEVELOPMENT EAST, LLC, A DELAWARE LIMITED LIABILITY COMPANY
- FIRST AMERICAN TITLE INSURANCE COMPANY
- GREENBERG TRAURIG, PA

POSSIBLE ENCROACHMENTS

- PARCEL K3 - POSSIBLE ENCROACHMENTS
- A PORTION OF CHAIN LINK FENCE, ALONG THE EAST BOUNDARY LINE, ENCROACH 0.7' FROM ADJOINING LAND ONTO SUBJECT PROPERTY. (SEE PAGE 13)
- A PORTION OF TEMPORARY CHAIN LINK FENCE, ALONG THE SOUTHWESTERLY BOUNDARY LINE, ENCROACH 1.7' FROM SUBJECT PROPERTY ONTO PERMANENT ACCESS EASEMENT. (SEE PAGE 12)

REVISIONS

DATE	JOB No.	REV.	BY:
05/27/25	155116	UPDATE TITLE OF COMMITMENT	C.A.F.
09/23/25	155443-5	UPDATE BOUNDARY SURVEY	C.A.F.
06/11/25	155443-5	UPDATE BOUNDARY SURVEY	C.A.F.

BOUNDARY SURVEY

PREPARED FOR:

GREYSTAR DEVELOPMENT EAST, LLC

LYING AND BEING IN SECTION 32, TOWNSHIP 53 SOUTH, RANGE 40 EAST
CITY OF DORAL, MIAMI-DADE COUNTY, FLORIDA.

J.Hernandez & Associates Inc
LAND SURVEYORS AND MAPPERS
CERTIFICATE OF AUTHORIZATION No. LB8092
3300 NW 112th AVE. SUITE #10, DORAL, FL 33172
(P) 305-526-0606 (E) info@jhasurveys.com

DRAWN BY: C.A.F.	CHECKED BY: J.G.H.	JOB NUM: 155116
DATE: 05/01/2025	DATE: 05/01/2025	F.B.: MD-80, PG. 30

LEGAL DESCRIPTION

SEARS SITE

A PARCEL OF LAND LOCATED WITHIN SECTION 32, TOWNSHIP 53 SOUTH, RANGE 40 EAST, LYING AND BEING IN DADE COUNTY, FLORIDA AND FURTHER BOUNDED AND DESCRIBED AS FOLLOWS:

BEGINNING AT A PIPE IN CONCRETE MARKING THE SOUTHWEST CORNER OF SAID SECTION 32, THENCE N 1° 43' 13" W, ALONG THE WEST LINE OF SAID SECTION 32, A DISTANCE OF 2644.15 FEET TO A POINT; THENCE N 89° 38' 52" E, A DISTANCE OF 1228.85 FEET TO A POINT; THENCE S 0° 21' 08" E, A DISTANCE OF 46.51 FEET TO THE PRINCIPAL POINT AND PLACE OF BEGINNING OF THE FOLLOWING DESCRIPTION:

THENCE DUE EAST, A DISTANCE OF 280.00 FEET TO A POINT; THENCE 247.40 FEET ALONG AN ARC TO THE RIGHT, HAVING A RADIUS OF 315.00 FEET AND A CHORD OF 241.09 FEET, BEARING S 67° 30' 00" E TO A POINT; THENCE S 45° 00' 00" E, A DISTANCE OF 297.19 FEET TO A POINT; THENCE S 45° 00' 00" W, A DISTANCE OF 426.52 FEET TO A POINT; THENCE DUE WEST, A DISTANCE OF 472.87 FEET TO A POINT; THENCE S 45° 00' 00" W, A DISTANCE OF 171.25 FEET TO A POINT; THENCE N 45° 00' 00" W, A DISTANCE OF 413.50 FEET TO A POINT; THENCE S 45° 00' 00" W, A DISTANCE OF 16.00 FEET TO A POINT; THENCE N 45° 00' 00" W, A DISTANCE OF 60.63 FEET TO A POINT; THENCE N 45° 00' 00" E, A DISTANCE OF 342.12 FEET TO A POINT; THENCE N 38° 11' 22.8" E, A DISTANCE OF 75.89 FEET TO A POINT; THENCE 267.04 FEET ALONG AN ARC TO THE RIGHT, HAVING A RADIUS OF 340.00 FEET AND A CHORD OF 260.22 FEET, BEARING N 67° 30' 00" E TO THE PRINCIPAL POINT AND PLACE OF BEGINNING.

TOGETHER WITH

JC PENNY SITE
PARCEL 1

A PART OF TRACT A, MIAMI INTERNATIONAL MALL PROPERTIES, ACCORDING TO THE PLAT RECORDED IN PLAT BOOK 117, PAGE 84, PUBLIC RECORDS OF MIAMI-DADE COUNTY, FLORIDA, AND FURTHER BOUNDED AND DESCRIBED AS FOLLOWS:

BEGINNING AT A PIPE IN CONCRETE MARKING THE SOUTHWEST COMER OF SAID SECTION 32, TOWNSHIP 53 SOUTH, RANGE 40 EAST; THENCE NORTH 89° 20' 55" EAST ALONG THE SOUTH LINE OF SECTION 32, A DISTANCE OF 2250.00 FEET TO A POINT; THENCE NORTH 01° 43' 13" WEST A DISTANCE OF 1149.03 FEET TO A POINT; THENCE SOUTH 88° 16' 47" WEST A DISTANCE OF 45.00 FEET TO A POINT; THENCE NORTH 01° 43' 13" WEST A DISTANCE OF 263.14 FEET TO A POINT, SAID POINT BEING THE PRINCIPAL POINT AND PLACE OF BEGINNING OF THE FOLLOWING DESCRIPTION: THENCE DUE WEST A DISTANCE OF 244.73 FEET TO A POINT; THENCE DUE NORTH A DISTANCE OF 102.00 FEET TO A POINT; THENCE DUE WEST A DISTANCE OF 432.00 FEET TO A POINT; THENCE DUE NORTH A DISTANCE OF 386.97 FEET TO A POINT; THENCE NORTH 45° 00' 00" EAST A DISTANCE OF 532.98 FEET TO A POINT; THENCE SOUTH 45° 00' 00" EASI A DISTANCE OF 274.31 FEET TO A POINT; THENCE 237.94 FEET ALONG AN ARC TO THE RIGHT, HAVING A RADIUS OF 315.00 FEET AND A CENTRAL ANGLE OF 43° 16' 47" TO A POINT; THENCE SOUTH 01°43' 13" EAST A DISTANCE OF 458.80 FEET TO A POINT, SAID POINT BEING THE PRINCIPAL POINT AND PLACE OF BEGINNING.

PARCEL 2

EASEMENT RIGHTS AS SET FORTH IN THE MIAMI INTERNATIONAL MALL EASEMENT AND OPERATING AGREEMENT BY AND AMONG SEARS, ROEBUCK AND CO .; ALSTORES REALTY CORPORATION; JORDAN MARSH COMPANY; FEDERATED DEPARTMENT STORES, INC .; ASSOCIATED DRY GOOD CORPORATION; AND WEST DADE COUNTY ASSOCIATES RECORDED APRIL 15, 1982 IN OFFICIAL RECORDS BOOK 11411, PAGE 1044: AS AFFECTED BY FIRST AMENDMENT TO EASEMENT AND OPERATING AGREEMENT BY AND BETWEEN SEARS, ROEBUCK AND CO .; ALLIED STORES GENERAL REAL ESTATE COMPANY; MAAS, INC .: BURDINE'S REAL ESTATE, INC .; J.C. PENNEY COMPANY, INC .; MERVYN'S; AND WEST DADE COUNTY ASSOCIATES, RECORDED OCTOBER 22, 1991 IN OFFICIAL RECORDS BOOK 15238, PAGE 2289; AND BY SECOND AMENDMENT TO EASEMENT AND OPERATING AGREEMENT BY AND BETWEEN SERITAGE SRC FINANCE LLC; MACY'S FLORIDA STORES, LLC; J.C. PENNEY CORPORATION, INC .; KOHL'S DEPARTMENT STORES, INC .; AND WEST DADE COUNTY ASSOCIATES RECORDED AUGUST 30, 2017 IN OFFICIAL RECORDS BOOK 30674, PAGE 1502; AND BY THIRD AMENDMENT TO EASEMENT AND OPERATING AGREEMENT BY AND BETWEEN SERITAGE SRC FINANCE LLC; MACY'S FLORIDA STORES, LLC; J.C. PENNEY CORPORATION, INC .; KOHL'S DEPARTMENT STORES, INC .; AND WEST DADE COUNTY ASSOCIATES RECORDED NOVEMBER 9, 2017 IN OFFICIAL RECORDS BOOK 30752, PAGE 434; AND BY FOURTH AMENDMENT TO EASEMENT AND OPERATING AGREEMENT RECORDED DECEMBER 8, 2017 IN OFFICIAL RECORDS BOOK 30785, PAGE 3451; AND BY FIFTH AMENDMENT TO EASEMENT AND OPERATING AGREEMENT BY AND BETWEEN SERITAGE SRC FINANCE LLC; MACY'S FLORIDA STORES, LLC; J.C. PENNEY CORPORATION, INC .; KOHL'S DEPARTMENT STORES, INC .; AND WEST DADE COUNTY ASSOCIATES RECORDED JUNE 21, 2018 IN OFFICIAL RECORDS BOOK 31023, PAGE 4347, PUBLIC RECORDS OF MIAMI-DADE COUNTY, FLORIDA.

TOGETHER WITH

PARCEL K1

A PORTION OF TRACT "A", MIAMI INTERNATIONAL MALL PROPERTIES ACCORDING TO THE PLAT THEREOF, AS RECORDED IN PLAT BOOK 117, PAGE 84, OF THE PUBLIC RECORDS OF MIAMI-DADE COUNTY, AND BEING MORE PARTICULARLY DESCRIBED AS FOLLOWS.

BEGINNING AT A PIPE IN CONCRETE MARKING THE SOUTHWEST CORNER OF SAID SECTION 32, THENCE N 1° 43' 13" W, ALONG THE WEST LINE OF SAID SECTION 32, A DISTANCE OF 2644.15 FEET TO A POINT; THENCE N 89° 38' 52" E, A DISTANCE OF 1502.00 FEET TO THE POINT OF BEGINNING OF THE FOLLOWING DESCRIBED PARCEL OF LAND; THENCE CONTINUE, N 89° 38' 52" E, A DISTANCE OF 215.66 FEET; THENCE, S 45° 00' 00" W, A DISTANCE OF 53.79 FEET TO A POINT; THENCE, S 45° 00' 00" E, A DISTANCE OF 110.32 FEET TO A POINT; THENCE, S 45° 00' 00" W, A DISTANCE OF 1.42 FEET TO A NON-TANGENT POINT; SAID POINT BEARS OF N 45° 00' 00" E FROM RADIUS POINT OF THE FOLLOWING DESCRIBED CIRCULAR CURVE CONCAVE TO THE SOUTHWEST AND HAVING A RADIUS OF 350.00 FEET; THENCE ALONG SAID CURVE TO THE LEFT FOR AN ARC DISTANCE OF 274.89 FEET THROUGH A CENTRAL ANGLE OF 45°00'00" TO A POINT OF TANGENCY; THENCE, N 90° 00' 00" W, FOR A DISTANCE OF 7.05 FEET TO A POINT (THE LAST TWO COURSES BEING CONCIDENT WITH THE OUTER EDGE OF PERMANENT ACCESS EASEMENT, AS RECORDED IN OFFICIAL RECORD BOOK 11411, AT PAGE 1044, OF THE PUBLIC RECORDS OF MIAMI-DADE COUNTY); THENCE, N 00° 21' 08" W, FOR A DISTANCE OF 13.20 FEET TO THE POINT OF BEGINNING.

TOGETHER WITH

PARCEL K2

A PORTION OF TRACT "A", MIAMI INTERNATIONAL MALL PROPERTIES ACCORDING TO THE PLAT THEREOF, AS RECORDED IN PLAT BOOK 117, PAGE 84, OF THE PUBLIC RECORDS OF MIAMI-DADE COUNTY, AND BEING MORE PARTICULARLY DESCRIBED AS FOLLOWS.

BEGINNING AT A PIPE IN CONCRETE MARKING THE SOUTHWEST CORNER OF SAID SECTION 32, THENCE N 1° 43' 13" W, ALONG THE WEST LINE OF SAID SECTION 32, A DISTANCE OF 2644.15 FEET TO A POINT; THENCE N 89° 38' 52" E, A DISTANCE OF 1717.66 FEET TO A POINT (ALSO KNOWN AS PRINCIPAL POINT); THENCE CONTINUE, N 89° 38' 52" E, A DISTANCE OF 532.59 FEET TO A POINT; THENCE, S 01° 43' 13" E, A DISTANCE OF 476.94 FEET TO THE POINT OF BEGINNING OF THE FOLLOWING DESCRIBED PARCEL OF LAND; THENCE CONTINUE, S 01° 43' 13" E, A DISTANCE OF 284.52 FEET TO A POINT; THENCE, S 88° 16' 47" W, A DISTANCE OF 10.00 FEET TO A POINT OF NON-TANGENT; SAID POINT BEARS OF N 88° 16' 47" E FROM RADIUS POINT OF THE FOLLOWING DESCRIBED CIRCULAR CURVE CONCAVE TO THE SOTHWEST AND HAVING A RADIUS OF 350.00 FEET; THENCE ALONG SAID CURVE TO THE LEFT FOR AN ARC DISTANCE OF 224.62 FEET THROUGH A CENTRAL ANGLE OF 36°46'17" TO A POINT (THE LAST COURSE BEING COINCIDENT WITH THE OUTER EDGE OF PERMANENT ACCESS EASEMENT, AS RECORDED ON SAID OFFICIAL RECORD BOOK 11411, AT PAGE 1044); THENCE, N 45°00'00" E, A DISTANCE OF 109.39 FEET TO THE POINT OF BEGINNING.

TOGETHER WITH

PARCEL K3

A PORTION OF TRACT "A", MIAMI INTERNATIONAL MALL PROPERTIES, ACCORDING TO THE PLAT THEREOF, AS RECORDED IN PLAT BOOK 117 AT PAGE 84 OF THE PUBLIC RECORDS OF MIAMI-DADE COUNTY FLORIDA AND BEING MORE PARTICULARLY DESCRIBED AS FOLLOWS:

COMMENCE AT THE MOST NORTHWESTERLY CORNER OF PARCEL IV, AS DESCRIBED IN OFFICIAL RECORDS BOOK 11411 AT PAGE 1044 OF THE PUBLIC RECORDS OF MIAMI-DADE COUNTY FLORIDA; THENCE RUN SOUTH 45 DEGREES 00 MINUTES 00 SECONDS EAST, ALONG THE SOUTHWESTERLY BOUNDARY LINE OF SAID PARCEL IV, FOR A DISTANCE OF 110.32 FEET TO THE POINT OF BEGINNING OF THE FOLLOWING PARCEL OF LAND; THENCE CONTINUE SOUTH 45 DEGREES 00 MINUTES 00 SECONDS EAST, ALONG SAID SOUTHWESTERLY BOUNDARY LINE OF SAID PARCEL IV, FOR A DISTANCE OF 611.18 FEET; THENCE SOUTH 45 DEGREES 00 MINUTES 00 SECONDS WEST, ALONG THE SOUTHWESTERLY EXTENSION OF THE SOUTHEASTERLY BOUNDARY LINE OF SAID PARCEL IV, FOR A DISTANCE OF 3.67 FEET TO A POINT; SAID POINT BEARS A BEARING OF NORTH 51 DEGREES 30 MINUTES 30 SECONDS EAST FROM THE RADIUS POINT OF THE FOLLOWING DESCRIBED CIRCULAR CURVE CONCAVE TO THE SOUTHWEST, HAVING A RADIUS OF 350.00 FEET AND A CENTRAL ANGLES OF 6 DEGREES 30 MINUTES 29 SECONDS FOR AN ARC DISTANCE OF 39.76 FEET TO A POINT OF TANGENCY; THENCE NORTH 45 DEGREES 00 MINUTES 00 SECONDS WEST FOR A DISTANCE OF 571.51 FEET (LAST MENTIONED TWO COURSE BEING ALONG THE NORTHEASTERLY BOUNDARY LINE OF PERMANENT ACCESS EASEMENT, AS DESCRIBED IN OFFICIAL RECORD BOOK 11411 AT PAGE 1044 OF THE PUBLIC RECORDS OF MIAMI-DADE COUNTY FLORIDA); THENCE NORTH 45 DEGREES 00 MINUTES 00 SECONDS EAST FOR A DISTANCE OF 1.42 FEET TO THE POINT OF BEGINNING.

TOGETHER WITH

PARCEL K4

A PORTION OF TRACT "A", MIAMI INTERNATIONAL MALL PROPERTIES ACCORDING TO THE PLAT THEREOF, AS RECORDED IN PLAT BOOK 117, PAGE 84, OF THE PUBLIC RECORDS OF MIAMI-DADE COUNTY, AND BEING MORE PARTICULARLY DESCRIBED AS FOLLOWS.

COMMENCE AT THE NORTHWEST CORNER OF THE SOUTHWEST 1/4 OF SECTION 32 TOWNSHIP 53 SOUTH, RANGE 40 EAST, AS SHOWN ON SAID PLAT OF MIAMI INTERNATIONAL MALL PROPERTIES; THENCE RUN, N 89° 38' 52" E, ALONG THE NORTH LINE OF SAID SECTION 32, A DISTANCE OF 1055.97 TO THE POINT OF BEGINNING OF THE FOLLOWING DESCRIBED PARCEL OF LAND; THENCE CONTINUE, N 89° 38' 52" E, ALONG THE NORTH LINE OF SAID SECTION 32, A DISTANCE OF 446.03 TO A POINT; THENCE, S 00°21'08"E, A DISTANCE OF 13.20 FEET TO A POINT; THENCE, N 90° 00' 00" W, FOR A DISTANCE OF 272.95 FEET TO A POINT OF CURVATURE OF A CIRCULAR CURVE TO THE LEFT, CONCAVE TO THE SOUTHEAST HAVING A RADIUS OF 375.00 FEET THROUGH A CENTRAL ANGLE OF 44°59'58" FOR AN ARC OF 294.52 FEET TO A POINT OF TANGENCY; THENCE, S45°00'00"W, A DISTANCE OF 388.46 FEET (THE LAST MENTIONED THREE COURSES BEING ALONG THE NORTHEASTERLY BOUNDARY LINE OF PERMANENT ACCESS EASEMENT, AS DESCRIBED IN OFFICIAL RECORD BOOK 11411 AT PAGE 1044 OF THE PUBLIC RECORDS OF MIAMI-DADE COUNTY FLORIDA); THENCE, N45°00'00"W, A DISTANCE OF 20.00 FEET; THENCE, N45°00'00"E, A DISTANCE OF 538.58 FEET TO THE POINT OF BEGINNING (LAST MENTIONED COURSE BEING ALONG THE SOUTHEASTERLY BOUNDARY LINE OF PARCEL VI-E AND ITS SOUTHWESTERLY EXTENSION, AS DESCRIBED IN OFFICIAL RECORD BOOK 11638, AT PAGE 1229 OF THE PUBLIC RECORDS OF MIAMI-DADE COUNTY FLORIDA).

TOGETHER WITH

PARCEL K5

A PORTION OF TRACT "A", MIAMI INTERNATIONAL MALL PROPERTIES ACCORDING TO THE PLAT THEREOF, AS RECORDED IN PLAT BOOK 117, PAGE 84, OF THE PUBLIC RECORDS OF MIAMI-DADE COUNTY, AND BEING MORE PARTICULARLY DESCRIBED AS FOLLOWS.

COMMENCE AT THE NORTHEAST CORNER OF SAID TRACT "A", AS SHOWN ON SAID PLAT OF MIAMI INTERNATIONAL MALL PROPERTIES; THENCE RUN, S01°43'13"E, ALONG THE EASTERLY LINE OF SAID TRACT "A", A DISTANCE OF 761.46 FEET TO THE POINT OF BEGINNING OF THE FOLLOWING DESCRIBED PARCEL OF LAND; THENCE CONTINUE, S01°43'13"E, ALONG THE EASTERLY LINE OF SAID TRACT "A", A DISTANCE OF 458.78 FEET TO A POINT; THENCE, S88°16'47"W, A DISTANCE OF 10.00 FEET TO A POINT; THENCE, N01°43'13"W, ALONG THE EASTERLY BOUNDARY LINE OF PERMANENT ACCESS EASEMENT, AS DESCRIBED IN OFFICIAL RECORD BOOK 11411 AT PAGE 1044 OF THE PUBLIC RECORDS OF MIAMI-DADE COUNTY FLORIDA, A DISTANCE 458.78 FEET TO A POINT; THENCE, N88°16'47"E, A DISTANCE OF 10.00 FEET TO THE POINT OF BEGINNING.

TOGETHER WITH

A PORTION OF ACCESS EASEMENT (RING ROAD)

A PORTION OF PERMANENT ACCESS EASEMENT, AS SHOWN IN OFFICIAL RECORD BOOK 11411, AT PAGE 1044 OF THE PUBLIC RECORDS OF MIAMI-DADE COUNTY, BOUNDED ON THE WEST BY A LINE PERPENDICULAR TO AND 29.00 FEET NORTHEASTERLY FROM THE MOST WESTERLY CORNER OF SEARS SITE (SAID DISTANCE BEING ALONG THE SOUTHEASTERLY LINE OF PERMANENT ACCESS EASEMENT) AND BOUNDED ON THE EAST BY A PERPENDICULAR LINE TO SAID PERMANENT ACCESS EASEMENT AT THE MOST SOUTHEASTERLY CORNER OF SAID JC PENNY SITE.

SURVEYOR'S CERTIFICATION:

I HEREBY CERTIFY THAT THIS "BOUNDARY SURVEY" OF THE PROPERTY DESCRIBED HEREON IS TRUE AND CORRECT TO THE BEST OF MY KNOWLEDGE AND BELIEF AS RECENTLY SURVEYED AND DRAWN UNDER MY SUPERVISION AND DIRECTION. THIS SURVEY COMPLIES WITH STANDARDS OF PRACTICE REQUIREMENTS ADOPTED BY THE FLORIDA STATE BOARD OF SURVEYORS AND MAPPERS PURSUANT TO CHAPTER 5J-17, FLORIDA ADMINISTRATIVE CODE.

THIS CERTIFICATION DOES NOT EXTEND TO ANY UNNAMED PARTIES.

BY:________________
JOSE G. HERNANDEZ, PRESIDENT
PROFESSIONAL LAND SURVEYOR No. 6952
STATE OF FLORIDA.

THE ELECTRONIC SEAL AND SIGNATURE APPEARING ON THIS SURVEY WAS AUTHORIZED BY JOSE G. HERNANDEZ, PROFESSIONAL LAND SURVEYOR NO. 6952 OF THE STATE OF FLORIDA ON MARCH 24, 2026.

THIS IS A BOUNDARY SURVEY
PROJECT NUMBER: MD-730

BOUNDARY SURVEY

FIELD SURVEY WAS COMPLETED ON: APRIL 29, 2025 AND UPDATED ON SEPTEMBER 23, 2025.

LEGEND AND ABBREVIATIONS

CONCRETE POLE	HANDICAP PAINT MARK
CONCRETE POWER POLE	BABY STROLLER PAINT MARK
CONCRETE LIGHT POLE	UNKNOWN MANHOLE
ALUMINUM POLE	WATER MANHOLE
ALUMINUM LIGHT POLE	SEWER MANHOLE
WOOD POLE	PHONE MANHOLE
WOOD POWER POLE	IRRIGATION MANHOLE
WOOD LIGHT POLE	GREASE TRAP MANHOLE
TB TRAFFIC BOX	GAS MANHOLE
SB STREET LIGHT BOX	FORCEMAIN MANHOLE
PB PHONE BOX	ELECTRICITY MANHOLE
IB IRRIGATION BOX	DRAINAGE MANHOLE
EB ELECTRIC BOX	COMMUNICATION MANHOLE
CB COMMUNICATION BOX	BELL SOUTH MANHOLE
TV CABLE T.V. BOX	PARKING METER
UB UNKNOWN BOX	PARKING KIOSK
TCB TRAFFIC CONTROL BOX	W WATER VALVE
CLEANOUT	S SEWER VALVE
BO BOLLARD	I IRRIGATION VALVE
ARM GATE	G GAS VALVE
ANCHOR	F FORCE MAIN VALVE
WM WATER METER	VACUUM BREAKER ASSEMBLY
IM IRRIGATION METER	SIAMESE CONNECTION
GM GAS METER	POST INDICATOR VALVE
EM ELECTRIC METER	FIRE HYDRANT
SQUARECOLUMN	DOUBLE DETECTOR CHECK VALVE
ROUND COLUMN	BACK FLOW PREVENTOR
MAIL BOX	PROPERTY LINE
IRRIGATION PUMP	CENTERLINE
GP GUARD POST	R/W RIGHT-OF-WAY
GROUND LIGHT	R RADIUS
FLAG POLE	D DELTA ANGLE
DRAINAGE WELL	L ARC DISTANCE
SQUARE DRAINAGE	PCP PERMANENT CONTROL POINT
P6 INLET	PRM PERMANENT REFERENCE MONUMENT
P5 INLET	PB __, PG __ PLAT BOOK AND PAGE
CURB INLET	OHW OVERHEAD UTILITY WIRES
CIRCULAR DRAINAGE	ORB OFFICIAL RECORDS BOOK
CATCH BASIN	CBS CONCRETE BLOCK STRUCTURE
ACCESS MANHOLE	CONC CONCRETE
SWALE INLET	C.L.F. CHAINLINK FENCE
TRAFFIC SIGNAL POLE	W.F. WOOD FENCE
TRAFFIC SIGN	FND. I.P. FOUND IRON PIPE
SURVEILLANCE CAMERA	FND. N&D. FOUND NAIL & BRASS DISC
PEDESTRIAN CROSS SIGNAL	CLR. CLEAR
PAVEMENT ASPHALT	ENCR. ENCROACHMENT
	(D) DEED OR LEGAL DISTANCE
	(M) MEASURED DISTANCE
	(R) RECORD OR PLATTED DISTANCE
	(C) RECORD CALCULATED
	U.E. UTILITY EASEMENT
	CONCRETE
	DENOTES PALM
	DENOTES TREE

N

GRAPHIC SCALE

0 10 20 40

1 INCH = 20 FEET

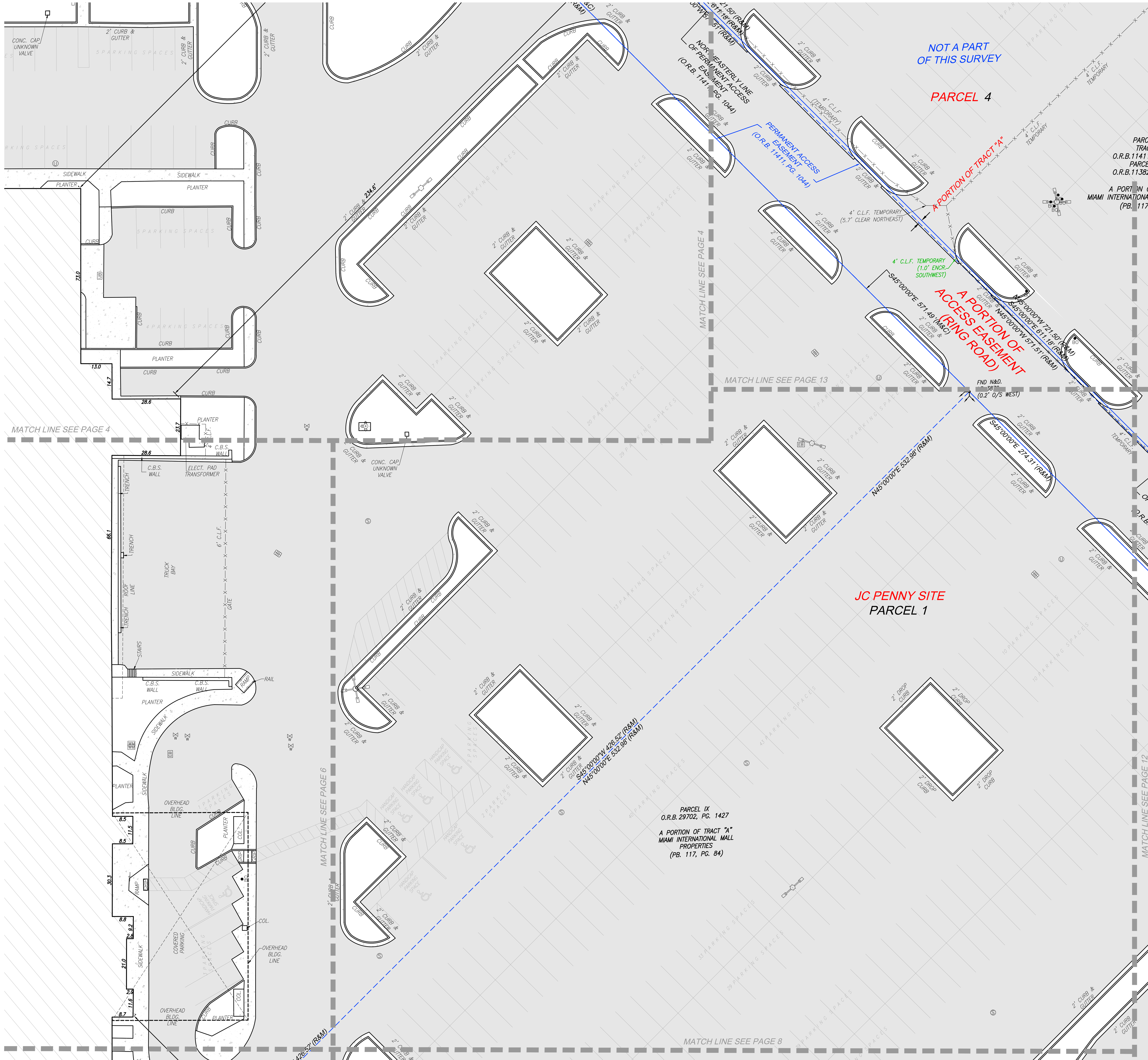

SURVEYOR'S NOTES

1. FIELD SURVEY WAS COMPLETED ON: APRIL 29, 2025 AND UPDATED ON SEPTEMBER 22, 2025.
2. LEGAL DESCRIPTION WAS PROVIDED BY THE CLIENT
3. SUBJECT PROPERTY AREA:
   SEARS SITE: 565,951 sq.ft. (12.992 Acres)
   PARCEL #1 - JC PENNY SITE : 419,055 sq.ft. (9.620 Acres)
   PARCEL K1: 6,276 sq.ft (0.144 Acres)
   PARCEL K2: 9.734 sq.ft (0.223 Acres)
   PARCEL K3: 897 SQ.FT. (0.021 ACRES)
   PARCEL K4: 19,036 SQ.FT. (0.437 ACRES)
   PARCEL K5: 4,414 SQ.FT. (0.101 ACRES)
   A PORTION OF PERMANENT ACCESS EASEMENT:
   90,340 SQ.FT. (2.074 ACRES)
4. BEARINGS BASED ON AN ASSUMED BEARING OF EAST ALONG THE NORTH LINE OF SUBJECT PROPERTY SITE #1.
5. DISTANCES ALONG BOUNDARY LINES, AS SHOWN HEREON, ARE RECORD AND/OR MEASURED UNLESS OTHERWISE NOTED.
6. INTERIOR LOT LINES, AS SHOWN HEREON, ARE FOR INFORMATIONAL PURPOSE ONLY, UNLESS OTHERWISE NOTED.
7. UNDERGROUND FOOTINGS, FOUNDATIONS AND HAVE NOT BEEN LOCATED AT THE TIME OF THIS SURVEY, UNLESS OTHERWISE NOTED.
8. ABOVEGROUND AND/OR VISIBLE UTILITIES HAVE BEEN LOCATED AT THE TIME OF THIS SURVEY, UNLESS OTHERWISE NOTED.
9. SUBJECT PROPERTY HAS A DIRECT PHYSICAL ACCESS TO AND FROM PERMANENT ACCESS EASEMENT.
10. THE SURVEYOR DOES NOT DETERMINE FENCE AND/OR WALL OWNERSHIP.
11. THERE IS A GAP BETWEEN SEARS SITE AND PERMANENT ACCESS EASEMENT.
12. THIS BOUNDARY SURVEY IS SUBJECT TO EASEMENTS, RIGHTS-OF-WAY AND OTHER MATTERS THAT MIGHT BE REFLECTED ON A SEARCH OF TITLE OF THE SUBJECT PROPERTY.

PROPERTY INFORMATION

SEARS SITE

- PROPERTY ADDRESS: 1625 NW 107th AVE
  CITY OF DORAL , MIAMI-DADE, FL 33172
- PARCEL ID : 35-3032-008-0050

JC PENNY SITE

- PROPERTY ADDRESS: 1603 NW 107th AVE
  CITY OF DORAL , MIAMI-DADE, FL 33172
- PARCEL ID : 35-3032-008-0140

CERTIFY TO:

- GREYSTAR DEVELOPMENT EAST, LLC, A DELAWARE LIMITED LIABILITY COMPANY
- FIRST AMERICAN TITLE INSURANCE COMPANY
- GREENBERG TRAURIG, PA

POSSIBLE ENCROACHMENTS

- PARCEL K3 - POSSIBLE ENCROACHMENTS
- A PORTION OF CHAIN LINK FENCE, ALONG THE EAST BOUNDARY LINE, ENCROACH 0.7' FROM ADJOINING LAND ONTO SUBJECT PROPERTY. (SEE PAGE 13)
- A PORTION OF TEMPORARY CHAIN LINK FENCE, ALONG THE SOUTHWESTERLY BOUNDARY LINE, ENCROACH 1.7' FROM SUBJECT PROPERTY ONTO PERMANENT ACCESS EASEMENT. (SEE PAGE 12)

REVISIONS

DATE	JOB No.	REV.	BY:
05/27/25	155116	UPDATE TITLE OF COMMITMENT	C.A.F.
09/23/25	155443-5	UPDATE BOUNDARY SURVEY	C.A.F.
06/11/25	155443-5	UPDATE BOUNDARY SURVEY	C.A.F.

BOUNDARY SURVEY

PREPARED FOR:

GREYSTAR DEVELOPMENT EAST, LLC

LYING AND BEING IN SECTION 32, TOWNSHIP 53 SOUTH, RANGE 40 EAST CITY OF DORAL, MIAMI-DADE COUNTY, FLORIDA.

J.Hernandez & Associates Inc
LAND SURVEYORS AND MAPPERS
CERTIFICATE OF AUTHORIZATION No. LB8092
3300 NW 112th AVE. SUITE #10, DORAL, FL 33172
(P) 305-526-0606 (E) info@jhasurveys.com

DRAWN BY: C.A.F.	CHECKED BY: J.G.H.	JOB NUM: 155116
DATE: 05/01/2025	DATE: 05/01/2025	F.B.: MD-80, PG. 30

LEGAL DESCRIPTION

SEARS SITE

A PARCEL OF LAND LOCATED WITHIN SECTION 32, TOWNSHIP 53 SOUTH, RANGE 40 EAST, LYING AND BEING IN DADE COUNTY, FLORIDA AND FURTHER BOUNDED AND DESCRIBED AS FOLLOWS:

BEGINNING AT A PIPE IN CONCRETE MARKING THE SOUTHWEST CORNER OF SAID SECTION 32, THENCE N 1° 43' 13" W, ALONG THE WEST LINE OF SAID SECTION 32, A DISTANCE OF 2644.15 FEET TO A POINT; THENCE N 89° 38' 52" E, A DISTANCE OF 1228.85 FEET TO A POINT; THENCE S 0° 21' 08" E, A DISTANCE OF 46.51 FEET TO THE PRINCIPAL POINT AND PLACE OF BEGINNING OF THE FOLLOWING DESCRIPTION:

THENCE DUE EAST, A DISTANCE OF 280.00 FEET TO A POINT; THENCE 247.40 FEET ALONG AN ARC TO THE RIGHT, HAVING A RADIUS OF 315.00 FEET AND A CHORD OF 241.09 FEET, BEARING S 67° 30' 00" E TO A POINT; THENCE S 45° 00' 00" E, A DISTANCE OF 297.19 FEET TO A POINT; THENCE S 45° 00' 00" W, A DISTANCE OF 426.52 FEET TO A POINT; THENCE DUE WEST, A DISTANCE OF 472.87 FEET TO A POINT; THENCE S 45° 00' 00" W, A DISTANCE OF 171.25 FEET TO A POINT; THENCE N 45° 00' 00" W, A DISTANCE OF 413.50 FEET TO A POINT; THENCE S 45° 00' 00" W, A DISTANCE OF 16.00 FEET TO A POINT; THENCE N 45° 00' 00" W, A DISTANCE OF 60.63 FEET TO A POINT; THENCE N 45° 00' 00" E, A DISTANCE OF 342.12 FEET TO A POINT; THENCE N 38° 11' 22.8" E, A DISTANCE OF 75.89 FEET TO A POINT; THENCE 267.04 FEET ALONG AN ARC TO THE RIGHT, HAVING A RADIUS OF 340.00 FEET AND A CHORD OF 260.22 FEET, BEARING N 67° 30' 00" E TO THE PRINCIPAL POINT AND PLACE OF BEGINNING.

TOGETHER WITH

JC PENNY SITE
PARCEL 1

A PART OF TRACT A, MIAMI INTERNATIONAL MALL PROPERTIES, ACCORDING TO THE PLAT RECORDED IN PLAT BOOK 117, PAGE 84, PUBLIC RECORDS OF MIAMI-DADE COUNTY, FLORIDA, AND FURTHER BOUNDED AND DESCRIBED AS FOLLOWS:

BEGINNING AT A PIPE IN CONCRETE MARKING THE SOUTHWEST COMER OF SAID SECTION 32, TOWNSHIP 53 SOUTH, RANGE 40 EAST; THENCE NORTH 89° 20' 55" EAST ALONG THE SOUTH LINE OF SECTION 32, A DISTANCE OF 2250.00 FEET TO A POINT; THENCE NORTH 01° 43' 13" WEST A DISTANCE OF 1149.03 FEET TO A POINT; THENCE SOUTH 88° 16' 47" WEST A DISTANCE OF 45.00 FEET TO A POINT; THENCE NORTH 01° 43' 13" WEST A DISTANCE OF 263.14 FEET TO A POINT, SAID POINT BEING THE PRINCIPAL POINT AND PLACE OF BEGINNING OF THE FOLLOWING DESCRIPTION: THENCE DUE WEST A DISTANCE OF 244.73 FEET TO A POINT; THENCE DUE NORTH A DISTANCE OF 102.00 FEET TO A POINT; THENCE DUE WEST A DISTANCE OF 432.00 FEET TO A POINT; THENCE DUE NORTH A DISTANCE OF 386.97 FEET TO A POINT; THENCE NORTH 45° 00' 00" EAST A DISTANCE OF 532.98 FEET TO A POINT; THENCE SOUTH 45° 00' 00" EASI A DISTANCE OF 274.31 FEET TO A POINT; THENCE 237.94 FEET ALONG AN ARC TO THE RIGHT, HAVING A RADIUS OF 315.00 FEET AND A CENTRAL ANGLE OF 43° 16' 47" TO A POINT; THENCE SOUTH 01°43' 13" EAST A DISTANCE OF 458.80 FEET TO A POINT, SAID POINT BEING THE PRINCIPAL POINT AND PLACE OF BEGINNING.

PARCEL 2

EASEMENT RIGHTS AS SET FORTH IN THE MIAMI INTERNATIONAL MALL EASEMENT AND OPERATING AGREEMENT BY AND AMONG SEARS, ROEBUCK AND CO .; ALSTORES REALTY CORPORATION; JORDAN MARSH COMPANY; FEDERATED DEPARTMENT STORES, INC .; ASSOCIATED DRY GOOD CORPORATION; AND WEST DADE COUNTY ASSOCIATES RECORDED APRIL 15, 1982 IN OFFICIAL RECORDS BOOK 11411, PAGE 1044: AS AFFECTED BY FIRST AMENDMENT TO EASEMENT AND OPERATING AGREEMENT BY AND BETWEEN SEARS, ROEBUCK AND CO .; ALLIED STORES GENERAL REAL ESTATE COMPANY; MAAS, INC .; BURDINE'S REAL ESTATE, INC .; J.C. PENNEY COMPANY, INC .; MERVYN'S; AND WEST DADE COUNTY ASSOCIATES, RECORDED OCTOBER 22, 1991 IN OFFICIAL RECORDS BOOK 15238, PAGE 2289; AND BY SECOND AMENDMENT TO EASEMENT AND OPERATING AGREEMENT BY AND BETWEEN SERITAGE SRC FINANCE LLC; MACY'S FLORIDA STORES, LLC; J.C. PENNEY CORPORATION, INC .; KOHL'S DEPARTMENT STORES, INC .; AND WEST DADE COUNTY ASSOCIATES RECORDED AUGUST 30, 2017 IN OFFICIAL RECORDS BOOK 30674, PAGE 1502; AND BY THIRD AMENDMENT TO EASEMENT AND OPERATING AGREEMENT BY AND BETWEEN SERITAGE SRC FINANCE LLC; MACY'S FLORIDA STORES, LLC; J.C. PENNEY CORPORATION, INC .; KOHL'S DEPARTMENT STORES, INC .; AND WEST DADE COUNTY ASSOCIATES RECORDED NOVEMBER 9, 2017 IN OFFICIAL RECORDS BOOK 30752, PAGE 434; AND BY FOURTH AMENDMENT TO EASEMENT AND OPERATING AGREEMENT RECORDED DECEMBER 8, 2017 IN OFFICIAL RECORDS BOOK 30785, PAGE 3451; AND BY FIFTH AMENDMENT TO EASEMENT AND OPERATING AGREEMENT BY AND BETWEEN SERITAGE SRC FINANCE LLC; MACY'S FLORIDA STORES, LLC; J.C. PENNEY CORPORATION, INC .; KOHL'S DEPARTMENT STORES, INC .; AND WEST DADE COUNTY ASSOCIATES RECORDED JUNE 21, 2018 IN OFFICIAL RECORDS BOOK 31023, PAGE 4347, PUBLIC RECORDS OF MIAMI-DADE COUNTY, FLORIDA.

TOGETHER WITH

PARCEL K1

A PORTION OF TRACT "A", MIAMI INTERNATIONAL MALL PROPERTIES ACCORDING TO THE PLAT THEREOF, AS RECORDED IN PLAT BOOK 117, PAGE 84, OF THE PUBLIC RECORDS OF MIAMI-DADE COUNTY, AND BEING MORE PARTICULARLY DESCRIBED AS FOLLOWS.

BEGINNING AT A PIPE IN CONCRETE MARKING THE SOUTHWEST CORNER OF SAID SECTION 32, THENCE N 1° 43' 13" W, ALONG THE WEST LINE OF SAID SECTION 32, A DISTANCE OF 2644.15 FEET TO A POINT; THENCE N 89° 38' 52" E, A DISTANCE OF 1502.00 FEET TO THE POINT OF BEGINNING OF THE FOLLOWING DESCRIBED PARCEL OF LAND; THENCE CONTINUE, N 89° 38' 52" E, A DISTANCE OF 215.66 FEET; THENCE, S 45° 00' 00" W, A DISTANCE OF 53.79 FEET TO A POINT; THENCE, S 45° 00' 00" E, A DISTANCE OF 110.32 FEET TO A POINT; THENCE, S 45° 00' 00" W, A DISTANCE OF 1.42 FEET TO A NON-TANGENT POINT; SAID POINT BEARS OF N 45° 00' 00" E FROM RADIUS POINT OF THE FOLLOWING DESCRIBED CIRCULAR CURVE CONCAVE TO THE SOUTHWEST AND HAVING A RADIUS OF 350.00 FEET; THENCE ALONG SAID CURVE TO THE LEFT FOR AN ARC DISTANCE OF 274.89 FEET THROUGH A CENTRAL ANGLE OF 45°00'00" TO A POINT OF TANGENCY; THENCE, N 90° 00' 00" W, FOR A DISTANCE OF 7.05 FEET TO A POINT (THE LAST TWO COURSES BEING CONCIDENT WITH THE OUTER EDGE OF PERMANENT ACCESS EASEMENT, AS RECORDED IN OFFICIAL RECORD BOOK 11411, AT PAGE 1044, OF THE PUBLIC RECORDS OF MIAMI-DADE COUNTY); THENCE, N 00° 21' 08" W, FOR A DISTANCE OF 13.20 FEET TO THE POINT OF BEGINNING.

TOGETHER WITH

PARCEL K2

A PORTION OF TRACT "A", MIAMI INTERNATIONAL MALL PROPERTIES ACCORDING TO THE PLAT THEREOF, AS RECORDED IN PLAT BOOK 117, PAGE 84, OF THE PUBLIC RECORDS OF MIAMI-DADE COUNTY, AND BEING MORE PARTICULARLY DESCRIBED AS FOLLOWS.

BEGINNING AT A PIPE IN CONCRETE MARKING THE SOUTHWEST CORNER OF SAID SECTION 32, THENCE N 1° 43' 13" W, ALONG THE WEST LINE OF SAID SECTION 32, A DISTANCE OF 2644.15 FEET TO A POINT; THENCE N 89° 38' 52" E, A DISTANCE OF 1717.66 FEET TO A POINT (ALSO KNOWN AS PRINCIPAL POINT); THENCE CONTINUE, N 89° 38' 52" E, A DISTANCE OF 532.59 FEET TO A POINT; THENCE, S 01° 43' 13" E, A DISTANCE OF 476.94 FEET TO THE POINT OF BEGINNING OF THE FOLLOWING DESCRIBED PARCEL OF LAND; THENCE CONTINUE, S 01° 43' 13" E, A DISTANCE OF 284.52 FEET TO A POINT; THENCE, S 88° 16' 47" W, A DISTANCE OF 10.00 FEET TO A POINT OF NON-TANGENT; SAID POINT BEARS OF N 88° 16' 47" E FROM RADIUS POINT OF THE FOLLOWING DESCRIBED CIRCULAR CURVE CONCAVE TO THE SOTHWEST AND HAVING A RADIUS OF 350.00 FEET; THENCE ALONG SAID CURVE TO THE LEFT FOR AN ARC DISTANCE OF 224.62 FEET THROUGH A CENTRAL ANGLE OF 36°46'17" TO A POINT (THE LAST COURSE BEING COINCIDENT WITH THE OUTER EDGE OF PERMANENT ACCESS EASEMENT, AS RECORDED ON SAID OFFICIAL RECORD BOOK 11411, AT PAGE 1044); THENCE, N 45°00'00" E, A DISTANCE OF 109.39 FEET TO THE POINT OF BEGINNING.

TOGETHER WITH

PARCEL K3

A PORTION OF TRACT "A", MIAMI INTERNATIONAL MALL PROPERTIES, ACCORDING TO THE PLAT THEREOF, AS RECORDED IN PLAT BOOK 117 AT PAGE 84 OF THE PUBLIC RECORDS OF MIAMI-DADE COUNTY FLORIDA AND BEING MORE PARTICULARLY DESCRIBED AS FOLLOWS:

COMMENCE AT THE MOST NORTHWESTERLY CORNER OF PARCEL IV, AS DESCRIBED IN OFFICIAL RECORDS BOOK 11411 AT PAGE 1044 OF THE PUBLIC RECORDS OF MIAMI-DADE COUNTY FLORIDA; THENCE RUN SOUTH 45 DEGREES 00 MINUTES 00 SECONDS EAST, ALONG THE SOUTHWESTERLY BOUNDARY LINE OF SAID PARCEL IV, FOR A DISTANCE OF 110.32 FEET TO THE POINT OF BEGINNING OF THE FOLLOWING PARCEL OF LAND; THENCE CONTINUE SOUTH 45 DEGREES 00 MINUTES 00 SECONDS EAST, ALONG SAID SOUTHWESTERLY BOUNDARY LINE OF SAID PARCEL IV, FOR A DISTANCE OF 611.18 FEET; THENCE SOUTH 45 DEGREES 00 MINUTES 00 SECONDS WEST, ALONG THE SOUTHWESTERLY EXTENSION OF THE SOUTHEASTERLY BOUNDARY LINE OF SAID PARCEL IV, FOR A DISTANCE OF 3.67 FEET TO A POINT; SAID POINT BEARS A BEARING OF NORTH 51 DEGREES 30 MINUTES 30 SECONDS EAST FROM THE RADIUS POINT OF THE FOLLOWING DESCRIBED CIRCULAR CURVE CONCAVE TO THE SOUTHWEST, HAVING A RADIUS OF 350.00 FEET AND A CENTRAL ANGLES OF 6 DEGREES 30 MINUTES 29 SECONDS FOR AN ARC DISTANCE OF 39.76 FEET TO A POINT OF TANGENCY; THENCE NORTH 45 DEGREES 00 MINUTES 00 SECONDS WEST FOR A DISTANCE OF 571.51 FEET (LAST MENTIONED TWO COURSE BEING ALONG THE NORTHEASTERLY BOUNDARY LINE OF PERMANENT ACCESS EASEMENT, AS DESCRIBED IN OFFICIAL RECORD BOOK 11411 AT PAGE 1044 OF THE PUBLIC RECORDS OF MIAMI-DADE COUNTY FLORIDA); THENCE NORTH 45 DEGREES 00 MINUTES 00 SECONDS EAST FOR A DISTANCE OF 1.42 FEET TO THE POINT OF BEGINNING.

TOGETHER WITH

PARCEL K4

A PORTION OF TRACT "A", MIAMI INTERNATIONAL MALL PROPERTIES ACCORDING TO THE PLAT THEREOF, AS RECORDED IN PLAT BOOK 117, PAGE 84, OF THE PUBLIC RECORDS OF MIAMI-DADE COUNTY, AND BEING MORE PARTICULARLY DESCRIBED AS FOLLOWS.

COMMENCE AT THE NORTHWEST CORNER OF THE SOUTHWEST 1/4 OF SECTION 32 TOWNSHIP 53 SOUTH, RANGE 40 EAST, AS SHOWN ON SAID PLAT OF MIAMI INTERNATIONAL MALL PROPERTIES; THENCE RUN, N 89° 38' 52" E, ALONG THE NORTH LINE OF SAID SECTION 32, A DISTANCE OF 1055.97 TO THE POINT OF BEGINNING OF THE FOLLOWING DESCRIBED PARCEL OF LAND; THENCE CONTINUE, N 89° 38' 52" E, ALONG THE NORTH LINE OF SAID SECTION 32, A DISTANCE OF 446.03 TO A POINT; THENCE, S 00°21'08"E, A DISTANCE OF 13.20 FEET TO A POINT; THENCE, N 90° 00' 00" W, FOR A DISTANCE OF 272.95 FEET TO A POINT OF CURVATURE OF A CIRCULAR CURVE TO THE LEFT, CONCAVE TO THE SOUTHEAST HAVING A RADIUS OF 375.00 FEET THROUGH A CENTRAL ANGLE OF 44°59'58" FOR AN ARC OF 294.52 FEET TO A POINT OF TANGENCY; THENCE, S45°00'00"W, A DISTANCE OF 388.46 FEET (THE LAST MENTIONED THREE COURSES BEING ALONG THE NORTHEASTERLY BOUNDARY LINE OF PERMANENT ACCESS EASEMENT, AS DESCRIBED IN OFFICIAL RECORD BOOK 11411 AT PAGE 1044 OF THE PUBLIC RECORDS OF MIAMI-DADE COUNTY FLORIDA); THENCE, N45°00'00"W, A DISTANCE OF 20.00 FEET; THENCE, N45°00'00"E, A DISTANCE OF 538.58 FEET TO THE POINT OF BEGINNING (LAST MENTIONED COURSE BEING ALONG THE SOUTHEASTERLY BOUNDARY LINE OF PARCEL VI-E AND ITS SOUTHWESTERLY EXTENSION, AS DESCRIBED IN OFFICIAL RECORD BOOK 11638, AT PAGE 1229 OF THE PUBLIC RECORDS OF MIAMI-DADE COUNTY FLORIDA).

TOGETHER WITH

PARCEL K5

A PORTION OF TRACT "A", MIAMI INTERNATIONAL MALL PROPERTIES ACCORDING TO THE PLAT THEREOF, AS RECORDED IN PLAT BOOK 117, PAGE 84, OF THE PUBLIC RECORDS OF MIAMI-DADE COUNTY, AND BEING MORE PARTICULARLY DESCRIBED AS FOLLOWS.

COMMENCE AT THE NORTHEAST CORNER OF SAID TRACT "A", AS SHOWN ON SAID PLAT OF MIAMI INTERNATIONAL MALL PROPERTIES; THENCE RUN, S01°43'13"E, ALONG THE EASTERLY LINE OF SAID TRACT "A", A DISTANCE OF 761.46 FEET TO THE POINT OF BEGINNING OF THE FOLLOWING DESCRIBED PARCEL OF LAND; THENCE CONTINUE, S01°43'13"E, ALONG THE EASTERLY LINE OF SAID TRACT "A", A DISTANCE OF 458.78 FEET TO A POINT; THENCE, S88°16'47"W, A DISTANCE OF 10.00 FEET TO A POINT; THENCE, N01°43'13"W, ALONG THE EASTERLY BOUNDARY LINE OF PERMANENT ACCESS EASEMENT, AS DESCRIBED IN OFFICIAL RECORD BOOK 11411 AT PAGE 1044 OF THE PUBLIC RECORDS OF MIAMI-DADE COUNTY FLORIDA, A DISTANCE 458.78 FEET TO A POINT; THENCE, N88°16'47"E, A DISTANCE OF 10.00 FEET TO THE POINT OF BEGINNING.

TOGETHER WITH

A PORTION OF ACCESS EASEMENT (RING ROAD)

A PORTION OF PERMANENT ACCESS EASEMENT, AS SHOWN IN OFFICIAL RECORD BOOK 11411, AT PAGE 1044 OF THE PUBLIC RECORDS OF MIAMI-DADE COUNTY, BOUNDED ON THE WEST BY A LINE PERPENDICULAR TO AND 29.00 FEET NORTHEASTERLY FROM THE MOST WESTERLY CORNER OF SEARS SITE (SAID DISTANCE BEING ALONG THE SOUTHEASTERLY LINE OF PERMANENT ACCESS EASEMENT) AND BOUNDED ON THE EAST BY A PERPENDICULAR LINE TO SAID PERMANENT ACCESS EASEMENT AT THE MOST SOUTHEASTERLY CORNER OF SAID JC PENNY SITE.

SURVEYOR'S CERTIFICATION:

I HEREBY CERTIFY THAT THIS "BOUNDARY SURVEY" OF THE PROPERTY DESCRIBED HEREON IS TRUE AND CORRECT TO THE BEST OF MY KNOWLEDGE AND BELIEF AS RECENTLY SURVEYED AND DRAWN UNDER MY SUPERVISION AND DIRECTION. THIS SURVEY COMPLIES WITH STANDARDS OF PRACTICE REQUIREMENTS ADOPTED BY THE FLORIDA STATE BOARD OF SURVEYORS AND MAPPERS PURSUANT TO CHAPTER 5J-17, FLORIDA ADMINISTRATIVE CODE.

THIS CERTIFICATION DOES NOT EXTEND TO ANY UNNAMED PARTIES.

BY:______________________

JOSE G. HERNANDEZ, PRESIDENT
PROFESSIONAL LAND SURVEYOR No. 6952
STATE OF FLORIDA.

THE ELECTRONIC SEAL AND SIGNATURE APPEARING ON THIS SURVEY WAS AUTHORIZED BY JOSE G. HERNANDEZ, PROFESSIONAL LAND SURVEYOR NO. 6952 OF THE STATE OF FLORIDA ON MARCH 24, 2026.

THIS IS A BOUNDARY SURVEY

PROJECT NUMBER: MD-730

BOUNDARY SURVEY

FIELD SURVEY WAS COMPLETED ON: APRIL 29, 2025 AND UPDATED ON SEPTEMBER 23, 2025.

LEGEND AND ABBREVIATIONS

	CONCRETE POLE
	CONCRETE POWER POLE
	CONCRETE LIGHT POLE
	ALUMINUM POLE
	ALUMINUM LIGHT POLE
	WOOD POLE
	WOOD POWER POLE
	WOOD LIGHT POLE
TB	TRAFFIC BOX
SB	STREET LIGHT BOX
PB	PHONE BOX
IB	IRRIGATION BOX
EB	ELECTRIC BOX
CB	COMMUNICATION BOX
TV	CABLE T.V. BOX
UB	UNKNOWN BOX
TCB	TRAFFIC CONTROL BOX
	CLEANOUT
BO	BOLLARD
	ARM GATE
	ANCHOR
WM	WATER METER
IM	IRRIGATION METER
GM	GAS METER
EM	ELECTRIC METER
	SQUARECOLUMN
	ROUND COLUMN
	MAIL BOX
	IRRIGATION PUMP
GP	GUARD POST
	GROUND LIGHT
	FLAG POLE
	DRAINAGE WELL
	SQUARE DRAINAGE
	P6 INLET
	P5 INLET
IN	CURB INLET
	CIRCULAR DRAINAGE
	CATCH BASIN
D	ACCESS MANHOLE
	SWALE INLET
	TRAFFIC SIGNAL POLE
	TRAFFIC SIGN
	SURVEILLANCE CAMERA
	PEDESTRIAN CROSS SIGNAL
	PAVEMENT ASPHALT
	HANDICAP PAINT MARK
	BABY STROLLER PAINT MARK
U	UNKNOWN MANHOLE
W	WATER MANHOLE
S	SEWER MANHOLE
P	PHONE MANHOLE
I	IRRIGATION MANHOLE
GT	GREASE TRAP MANHOLE
G	GAS MANHOLE
F	FORCEMAIN MANHOLE
E	ELECTRICITY MANHOLE
D	DRAINAGE MANHOLE
C	COMMUNICATION MANHOLE
B	BELL SOUTH MANHOLE
	PARKING METER
	PARKING KIOSK
W	WATER VALVE
S	SEWER VALVE
I	IRRIGATION VALVE
G	GAS VALVE
F	FORCE MAIN VALVE
	VACUUM BREAKER ASSEMBLY
	SIAMESE CONNECTION
	POST INDICATOR VALVE
	FIRE HYDRANT
	DOUBLE DETECTOR CHECK VALVE
	BACK FLOW PREVENTOR
	PROPERTY LINE
℄	CENTERLINE
R/W	RIGHT-OF-WAY
R	RADIUS
D	DELTA ANGLE
L	ARC DISTANCE
PCP	PERMANENT CONTROL POINT
PRM	PERMANENT REFERENCE MONUMENT
PB __, PG __	PLAT BOOK AND PAGE
OHW	OVERHEAD UTILITY WIRES
ORB	OFFICIAL RECORDS BOOK
CBS	CONCRETE BLOCK STRUCTURE
CONC	CONCRETE
C.L.F.	CHAINLINK FENCE
W.F.	WOOD FENCE
FND. I.P.	FOUND IRON PIPE
FND. N&D.	FOUND NAIL & BRASS DISC
CLR.	CLEAR
ENCR.	ENCROACHMENT
(D)	DEED OR LEGAL DISTANCE
(M)	MEASURED DISTANCE
(R)	RECORD OR PLATTED DISTANCE
(C)	RECORD CALCULATED
U.E.	UTILITY EASEMENT
	CONCRETE
	DENOTES PALM
	DENOTES TREE

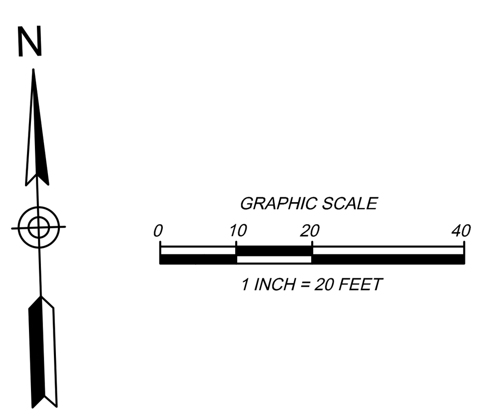

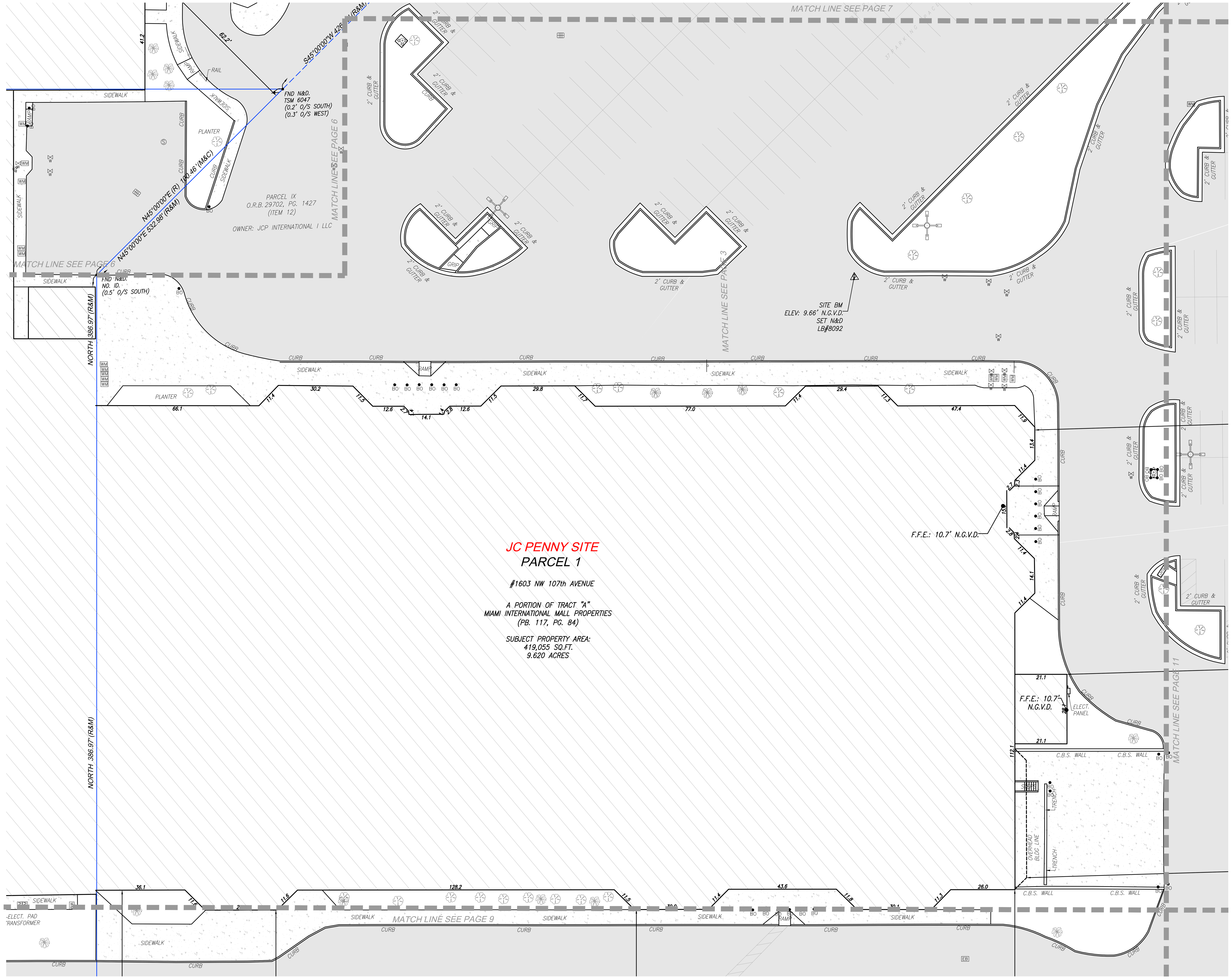

SURVEYOR'S NOTES

1. FIELD SURVEY WAS COMPLETED ON: APRIL 29, 2025 AND UPDATED ON SEPTEMBER 22, 2025.
2. LEGAL DESCRIPTION WAS PROVIDED BY THE CLIENT
3. SUBJECT PROPERTY AREA:
   SEARS SITE: 565,951 sq.ft. (12.992 Acres)
   PARCEL #1 - JC PENNY SITE : 419,055 sq.ft. (9.620 Acres)
   PARCEL K1: 6,276 sq.ft (0.144 Acres)
   PARCEL K2: 9.734 sq.ft (0.223 Acres)
   PARCEL K3: 897 SQ.FT. (0.021 ACRES)
   PARCEL K4: 19,036 SQ.FT. (0.437 ACRES)
   PARCEL K5: 4,414 SQ.FT. (0.101 ACRES)
   A PORTION OF PERMANENT ACCESS EASEMENT:
   90,340 SQ.FT. (2.074 ACRES)
4. BEARINGS BASED ON AN ASSUMED BEARING OF EAST ALONG THE NORTH LINE OF SUBJECT PROPERTY SITE #1.
5. DISTANCES ALONG BOUNDARY LINES, AS SHOWN HEREON, ARE RECORD AND/OR MEASURED UNLESS OTHERWISE NOTED.
6. INTERIOR LOT LINES, AS SHOWN HEREON, ARE FOR INFORMATIONAL PURPOSE ONLY, UNLESS OTHERWISE NOTED.
7. UNDERGROUND FOOTINGS, FOUNDATIONS AND HAVE NOT BEEN LOCATED AT THE TIME OF THIS SURVEY, UNLESS OTHERWISE NOTED.
8. ABOVEGROUND AND/OR VISIBLE UTILITIES HAVE BEEN LOCATED AT THE TIME OF THIS SURVEY, UNLESS OTHERWISE NOTED.
9. SUBJECT PROPERTY HAS A DIRECT PHYSICAL ACCESS TO AND FROM PERMANENT ACCESS EASEMENT.
10. THE SURVEYOR DOES NOT DETERMINE FENCE AND/OR WALL OWNERSHIP.
11. THERE IS A GAP BETWEEN SEARS SITE AND PERMANENT ACCESS EASEMENT.
12. THIS BOUNDARY SURVEY IS SUBJECT TO EASEMENTS, RIGHTS-OF-WAY AND OTHER MATTERS THAT MIGHT BE REFLECTED ON A SEARCH OF TITLE OF THE SUBJECT PROPERTY.

PROPERTY INFORMATION

SEARS SITE

- PROPERTY ADDRESS: 1625 NW 107th AVE
  CITY OF DORAL , MIAMI-DADE, FL 33172
- PARCEL ID : 35-3032-008-0050

JC PENNY SITE

- PROPERTY ADDRESS: 1603 NW 107th AVE
  CITY OF DORAL , MIAMI-DADE, FL 33172
- PARCEL ID : 35-3032-008-0140

CERTIFY TO:

- GREYSTAR DEVELOPMENT EAST, LLC, A DELAWARE LIMITED LIABILITY COMPANY
- FIRST AMERICAN TITLE INSURANCE COMPANY
- GREENBERG TRAURIG, PA

POSSIBLE ENCROACHMENTS

- A PORTION OF CHAIN LINK FENCE, ALONG THE WEST BOUNDARY LINE, ENCROACH 0.7' FROM SUBJECT PROPERTY ONTO ADJOINING LAND.
- A PORTION OF TEMPORARY CHAIN LINK FENCE, ALONG THE NORTHWESTERLY BOUNDARY LINE, ENCROACH 1.7' FROM SUBJECT PROPERTY ONTO PERMANENT ACCESS EASEMENT.
- A PORTION OF TEMPORARY CHAIN LINK FENCE, ALONG THE NORTH BOUNDARY LINE, ENCROACH 34.3' FROM SUBJECT PROPERTY ONTO ADJOINING LAND.
- THERE ARE NOT, ADDITIONAL ,OBSERVED, ENCROACHMENTS ONTO THE SUBJECT PROPERTY FROM ADJOINING LANDS, OR FROM THE ADJOINING LANDS ONTO SUBJECT PROPERTY, UNLESS OTHERWISE NOTED.

REVISIONS

DATE	JOB No.	REV.	BY:
05/27/25	155116	UPDATE TITLE OF COMMITMENT	C.A.F.
09/23/25	155443-5	UPDATE BOUNDARY SURVEY	C.A.F.
06/11/25	155443-5	UPDATE BOUNDARY SURVEY	C.A.F.

BOUNDARY SURVEY

PREPARED FOR:

GREYSTAR DEVELOPMENT EAST, LLC

LYING AND BEING IN SECTION 32, TOWNSHIP 53 SOUTH, RANGE 40 EAST
CITY OF DORAL, MIAMI-DADE COUNTY, FLORIDA.

J.Hernandez & Associates Inc
LAND SURVEYORS AND MAPPERS
CERTIFICATE OF AUTHORIZATION No. LB8092
3300 NW 112th AVE. SUITE #10, DORAL, FL 33172
(P) 305-526-0606 (E) info@jhasurveys.com

DRAWN BY: C.A.F.	CHECKED BY: J.G.H.	JOB NUM: 155116
DATE: 05/01/2025	DATE: 05/01/2025	F.B.: MD-80, PG. 30

LEGAL DESCRIPTION

SEARS SITE

A PARCEL OF LAND LOCATED WITHIN SECTION 32, TOWNSHIP 53 SOUTH, RANGE 40 EAST, LYING AND BEING IN DADE COUNTY, FLORIDA AND FURTHER BOUNDED AND DESCRIBED AS FOLLOWS:

BEGINNING AT A PIPE IN CONCRETE MARKING THE SOUTHWEST CORNER OF SAID SECTION 32, THENCE N 1° 43' 13" W, ALONG THE WEST LINE OF SAID SECTION 32, A DISTANCE OF 2644.15 FEET TO A POINT; THENCE N 89° 38' 52" E, A DISTANCE OF 1228.85 FEET TO A POINT; THENCE S 0° 21' 08" E, A DISTANCE OF 46.51 FEET TO THE PRINCIPAL POINT AND PLACE OF BEGINNING OF THE FOLLOWING DESCRIPTION:

THENCE DUE EAST, A DISTANCE OF 280.00 FEET TO A POINT; THENCE 247.40 FEET ALONG AN ARC TO THE RIGHT, HAVING A RADIUS OF 315.00 FEET AND A CHORD OF 241.09 FEET, BEARING S 67° 30' 00" E TO A POINT; THENCE S 45° 00' 00" E, A DISTANCE OF 297.19 FEET TO A POINT; THENCE S 45° 00' 00" W, A DISTANCE OF 426.52 FEET TO A POINT; THENCE DUE WEST, A DISTANCE OF 472.87 FEET TO A POINT; THENCE S 45° 00' 00" W, A DISTANCE OF 171.25 FEET TO A POINT; THENCE N 45° 00' 00" W, A DISTANCE OF 413.50 FEET TO A POINT; THENCE S 45° 00' W, A DISTANCE OF 16.00 FEET TO A POINT; THENCE N 45° 00' 00" W, A DISTANCE OF 60.63 FEET TO A POINT; THENCE N 45° 00' 00" E, A DISTANCE OF 342.12 FEET TO A POINT; THENCE N 38° 11' 22.8" E, A DISTANCE OF 75.89 FEET TO A POINT; THENCE 267.04 FEET ALONG AN ARC TO THE RIGHT, HAVING A RADIUS OF 340.00 FEET AND A CHORD OF 260.22 FEET, BEARING N 67° 30' 00" E TO THE PRINCIPAL POINT AND PLACE OF BEGINNING.

TOGETHER WITH

JC PENNY SITE
PARCEL 1

A PART OF TRACT A, MIAMI INTERNATIONAL MALL PROPERTIES, ACCORDING TO THE PLAT RECORDED IN PLAT BOOK 117, PAGE 84, PUBLIC RECORDS OF MIAMI-DADE COUNTY, FLORIDA, AND FURTHER BOUNDED AND DESCRIBED AS FOLLOWS:

BEGINNING AT A PIPE IN CONCRETE MARKING THE SOUTHWEST COMER OF SAID SECTION 32, TOWNSHIP 53 SOUTH, RANGE 40 EAST; THENCE NORTH 89° 20' 55" EAST ALONG THE SOUTH LINE OF SECTION 32, A DISTANCE OF 2250.00 FEET TO A POINT; THENCE NORTH 01° 43' 13" WEST A DISTANCE OF 1149.03 FEET TO A POINT; THENCE SOUTH 88° 16' 47" WEST A DISTANCE OF 45.00 FEET TO A POINT; THENCE NORTH 01° 43' 13" WEST A DISTANCE OF 263.14 FEET TO A POINT, SAID POINT BEING THE PRINCIPAL POINT AND PLACE OF BEGINNING OF THE FOLLOWING DESCRIPTION: THENCE DUE WEST A DISTANCE OF 244.73 FEET TO A POINT; THENCE DUE NORTH A DISTANCE OF 102.00 FEET TO A POINT; THENCE DUE WEST A DISTANCE OF 432.00 FEET TO A POINT; THENCE DUE NORTH A DISTANCE OF 386.97 FEET TO A POINT; THENCE NORTH 45° 00' 00" EAST A DISTANCE OF 532.98 FEET TO A POINT; THENCE SOUTH 45° 00' 00" EASI A DISTANCE OF 274.31 FEET TO A POINT; THENCE 237.94 FEET ALONG AN ARC TO THE RIGHT, HAVING A RADIUS OF 315.00 FEET AND A CENTRAL ANGLE OF 43° 16' 47" TO A POINT; THENCE SOUTH 01°43' 13" EAST A DISTANCE OF 458.80 FEET TO A POINT, SAID POINT BEING THE PRINCIPAL POINT AND PLACE OF BEGINNING.

PARCEL 2

EASEMENT RIGHTS AS SET FORTH IN THE MIAMI INTERNATIONAL MALL EASEMENT AND OPERATING AGREEMENT BY AND AMONG SEARS, ROEBUCK AND CO .; ALSTORES REALTY CORPORATION; JORDAN MARSH COMPANY; FEDERATED DEPARTMENT STORES, INC .; ASSOCIATED DRY GOOD CORPORATION; AND WEST DADE COUNTY ASSOCIATES RECORDED APRIL 15, 1982 IN OFFICIAL RECORDS BOOK 11411, PAGE 1044: AS AFFECTED BY FIRST AMENDMENT TO EASEMENT AND OPERATING AGREEMENT BY AND BETWEEN SEARS, ROEBUCK AND CO .; ALLIED STORES GENERAL REAL ESTATE COMPANY; MAAS, INC .: BURDINE'S REAL ESTATE, INC .; J.C. PENNEY COMPANY, INC .; MERVYN'S; AND WEST DADE COUNTY ASSOCIATES, RECORDED OCTOBER 22, 1991 IN OFFICIAL RECORDS BOOK 15238, PAGE 2289; AND BY SECOND AMENDMENT TO EASEMENT AND OPERATING AGREEMENT BY AND BETWEEN SERITAGE SRC FINANCE LLC; MACY'S FLORIDA STORES, LLC; J.C. PENNEY CORPORATION, INC .; KOHL'S DEPARTMENT STORES, INC .; AND WEST DADE COUNTY ASSOCIATES RECORDED AUGUST 30, 2017 IN OFFICIAL RECORDS BOOK 30674, PAGE 1502; AND BY THIRD AMENDMENT TO EASEMENT AND OPERATING AGREEMENT BY AND BETWEEN SERITAGE SRC FINANCE LLC; MACY'S FLORIDA STORES, LLC; J.C. PENNEY CORPORATION, INC .; KOHL'S DEPARTMENT STORES, INC .; AND WEST DADE COUNTY ASSOCIATES RECORDED NOVEMBER 9, 2017 IN OFFICIAL RECORDS BOOK 30752, PAGE 434; AND BY FOURTH AMENDMENT TO EASEMENT AND OPERATING AGREEMENT RECORDED DECEMBER 8, 2017 IN OFFICIAL RECORDS BOOK 30785, PAGE 3451; AND BY FIFTH AMENDMENT TO EASEMENT AND OPERATING AGREEMENT BY AND BETWEEN SERITAGE SRC FINANCE LLC; MACY'S FLORIDA STORES, LLC; J.C. PENNEY CORPORATION, INC .; KOHL'S DEPARTMENT STORES, INC .; AND WEST DADE COUNTY ASSOCIATES RECORDED JUNE 21, 2018 IN OFFICIAL RECORDS BOOK 31023, PAGE 4347, PUBLIC RECORDS OF MIAMI-DADE COUNTY, FLORIDA.

TOGETHER WITH

PARCEL K1

A PORTION OF TRACT "A", MIAMI INTERNATIONAL MALL PROPERTIES ACCORDING TO THE PLAT THEREOF, AS RECORDED IN PLAT BOOK 117, PAGE 84, OF THE PUBLIC RECORDS OF MIAMI-DADE COUNTY, AND BEING MORE PARTICULARLY DESCRIBED AS FOLLOWS.

BEGINNING AT A PIPE IN CONCRETE MARKING THE SOUTHWEST CORNER OF SAID SECTION 32, THENCE N 1° 43' 13" W, ALONG THE WEST LINE OF SAID SECTION 32, A DISTANCE OF 2644.15 FEET TO A POINT; THENCE N 89° 38' 52" E, A DISTANCE OF 1502.00 FEET TO THE POINT OF BEGINNING OF THE FOLLOWING DESCRIBED PARCEL OF LAND; THENCE CONTINUE, N 89° 38' 52" E, A DISTANCE OF 215.66 FEET; THENCE, S 45° 00' 00" W, A DISTANCE OF 53.79 FEET TO A POINT; THENCE, S 45° 00' 00" E, A DISTANCE OF 110.32 FEET TO A POINT; THENCE, S 45° 00' 00" W, A DISTANCE OF 1.42 FEET TO A NON-TANGENT POINT; SAID POINT BEARS OF N 45° 00' 00" E FROM RADIUS POINT OF THE FOLLOWING DESCRIBED CIRCULAR CURVE CONCAVE TO THE SOUTHWEST AND HAVING A RADIUS OF 350.00 FEET; THENCE ALONG SAID CURVE TO THE LEFT FOR AN ARC DISTANCE OF 274.89 FEET THROUGH A CENTRAL ANGLE OF 45°00'00" TO A POINT OF TANGENCY; THENCE, N 90° 00' 00" W, FOR A DISTANCE OF 7.05 FEET TO A POINT (THE LAST TWO COURSES BEING CONCIDENT WITH THE OUTER EDGE OF PERMANENT ACCESS EASEMENT, AS RECORDED IN OFFICIAL RECORD BOOK 11411, AT PAGE 1044, OF THE PUBLIC RECORDS OF MIAMI-DADE COUNTY); THENCE, N 00° 21' 08" W, FOR A DISTANCE OF 13.20 FEET TO THE POINT OF BEGINNING.

TOGETHER WITH

PARCEL K2

A PORTION OF TRACT "A", MIAMI INTERNATIONAL MALL PROPERTIES ACCORDING TO THE PLAT THEREOF, AS RECORDED IN PLAT BOOK 117, PAGE 84, OF THE PUBLIC RECORDS OF MIAMI-DADE COUNTY, AND BEING MORE PARTICULARLY DESCRIBED AS FOLLOWS.

BEGINNING AT A PIPE IN CONCRETE MARKING THE SOUTHWEST CORNER OF SAID SECTION 32, THENCE N 1° 43' 13" W, ALONG THE WEST LINE OF SAID SECTION 32, A DISTANCE OF 2644.15 FEET TO A POINT; THENCE N 89° 38' 52" E, A DISTANCE OF 1717.66 FEET TO A POINT (ALSO KNOWN AS PRINCIPAL POINT); THENCE CONTINUE, N 89° 38' 52" E, A DISTANCE OF 532.59 FEET TO A POINT; THENCE, S 01° 43' 13" E, A DISTANCE OF 476.94 FEET TO THE POINT OF BEGINNING OF THE FOLLOWING DESCRIBED PARCEL OF LAND; THENCE CONTINUE, S 01° 43' 13" E, A DISTANCE OF 284.52 FEET TO A POINT; THENCE, S 88° 16' 47" W, A DISTANCE OF 10.00 FEET TO A POINT OF NON-TANGENT; SAID POINT BEARS OF N 88° 16' 47" E FROM RADIUS POINT OF THE FOLLOWING DESCRIBED CIRCULAR CURVE CONCAVE TO THE SOTHWEST AND HAVING A RADIUS OF 350.00 FEET; THENCE ALONG SAID CURVE TO THE LEFT FOR AN ARC DISTANCE OF 224.62 FEET THROUGH A CENTRAL ANGLE OF 36°46'17" TO A POINT (THE LAST COURSE BEING COINCIDENT WITH THE OUTER EDGE OF PERMANENT ACCESS EASEMENT, AS RECORDED ON SAID OFFICIAL RECORD BOOK 11411, AT PAGE 1044); THENCE, N 45°00'00" E, A DISTANCE OF 109.39 FEET TO THE POINT OF BEGINNING.

TOGETHER WITH

PARCEL K3

A PORTION OF TRACT "A", MIAMI INTERNATIONAL MALL PROPERTIES, ACCORDING TO THE PLAT THEREOF, AS RECORDED IN PLAT BOOK 117 AT PAGE 84 OF THE PUBLIC RECORDS OF MIAMI-DADE COUNTY FLORIDA AND BEING MORE PARTICULARLY DESCRIBED AS FOLLOWS:

COMMENCE AT THE MOST NORTHWESTERLY CORNER OF PARCEL IV, AS DESCRIBED IN OFFICIAL RECORDS BOOK 11411 AT PAGE 1044 OF THE PUBLIC RECORDS OF MIAMI-DADE COUNTY FLORIDA; THENCE RUN SOUTH 45 DEGREES 00 MINUTES 00 SECONDS EAST, ALONG THE SOUTHWESTERLY BOUNDARY LINE OF SAID PARCEL IV, FOR A DISTANCE OF 110.32 FEET TO THE POINT OF BEGINNING OF THE FOLLOWING PARCEL OF LAND; THENCE CONTINUE SOUTH 45 DEGREES 00 MINUTES 00 SECONDS EAST, ALONG SAID SOUTHWESTERLY BOUNDARY LINE OF SAID PARCEL IV, FOR A DISTANCE OF 611.18 FEET; THENCE SOUTH 45 DEGREES 00 MINUTES 00 SECONDS WEST, ALONG THE SOUTHWESTERLY EXTENSION OF THE SOUTHEASTERLY BOUNDARY LINE OF SAID PARCEL IV, FOR A DISTANCE OF 3.67 FEET TO A POINT; SAID POINT BEARS A BEARING OF NORTH 51 DEGREES 30 MINUTES 30 SECONDS EAST FROM THE RADIUS POINT OF THE FOLLOWING DESCRIBED CIRCULAR CURVE CONCAVE TO THE SOUTHWEST, HAVING A RADIUS OF 350.00 FEET AND A CENTRAL ANGLES OF 6 DEGREES 30 MINUTES 29 SECONDS FOR AN ARC DISTANCE OF 39.76 FEET TO A POINT OF TANGENCY; THENCE NORTH 45 DEGREES 00 MINUTES 00 SECONDS WEST FOR A DISTANCE OF 571.51 FEET (LAST MENTIONED TWO COURSE BEING ALONG THE NORTHEASTERLY BOUNDARY LINE OF PERMANENT ACCESS EASEMENT, AS DESCRIBED IN OFFICIAL RECORD BOOK 11411 AT PAGE 1044 OF THE PUBLIC RECORDS OF MIAMI-DADE COUNTY FLORIDA); THENCE NORTH 45 DEGREES 00 MINUTES 00 SECONDS EAST FOR A DISTANCE OF 1.42 FEET TO THE POINT OF BEGINNING.

TOGETHER WITH

PARCEL K4

A PORTION OF TRACT "A", MIAMI INTERNATIONAL MALL PROPERTIES ACCORDING TO THE PLAT THEREOF, AS RECORDED IN PLAT BOOK 117, PAGE 84, OF THE PUBLIC RECORDS OF MIAMI-DADE COUNTY, AND BEING MORE PARTICULARLY DESCRIBED AS FOLLOWS.

COMMENCE AT THE NORTHWEST CORNER OF THE SOUTHWEST 1/4 OF SECTION 32 TOWNSHIP 53 SOUTH, RANGE 40 EAST, AS SHOWN ON SAID PLAT OF MIAMI INTERNATIONAL MALL PROPERTIES; THENCE RUN, N 89° 38' 52" E, ALONG THE NORTH LINE OF SAID SECTION 32, A DISTANCE OF 1055.97 TO THE POINT OF BEGINNING OF THE FOLLOWING DESCRIBED PARCEL OF LAND; THENCE CONTINUE, N 89° 38' 52" E, ALONG THE NORTH LINE OF SAID SECTION 32, A DISTANCE OF 446.03 TO A POINT; THENCE, S 00°21'08"E, A DISTANCE OF 13.20 FEET TO A POINT; THENCE, N 90° 00' 00" W, FOR A DISTANCE OF 272.95 FEET TO A POINT OF CURVATURE OF A CIRCULAR CURVE TO THE LEFT, CONCAVE TO THE SOUTHEAST HAVING A RADIUS OF 375.00 FEET THROUGH A CENTRAL ANGLE OF 44°59'58" FOR AN ARC OF 294.52 FEET TO A POINT OF TANGENCY; THENCE, S45°00'00"W, A DISTANCE OF 388.46 FEET (THE LAST MENTIONED THREE COURSES BEING ALONG THE NORTHEASTERLY BOUNDARY LINE OF PERMANENT ACCESS EASEMENT, AS DESCRIBED IN OFFICIAL RECORD BOOK 11411 AT PAGE 1044 OF THE PUBLIC RECORDS OF MIAMI-DADE COUNTY FLORIDA); THENCE, N45°00'00"W, A DISTANCE OF 20.00 FEET; THENCE, N45°00'00"E, A DISTANCE OF 538.58 FEET TO THE POINT OF BEGINNING (LAST MENTIONED COURSE BEING ALONG THE SOUTHEASTERLY BOUNDARY LINE OF PARCEL VI-E AND ITS SOUTHWESTERLY EXTENSION, AS DESCRIBED IN OFFICIAL RECORD BOOK 11638, AT PAGE 1229 OF THE PUBLIC RECORDS OF MIAMI-DADE COUNTY FLORIDA).

TOGETHER WITH

PARCEL K5

A PORTION OF TRACT "A", MIAMI INTERNATIONAL MALL PROPERTIES ACCORDING TO THE PLAT THEREOF, AS RECORDED IN PLAT BOOK 117, PAGE 84, OF THE PUBLIC RECORDS OF MIAMI-DADE COUNTY, AND BEING MORE PARTICULARLY DESCRIBED AS FOLLOWS.

COMMENCE AT THE NORTHEAST CORNER OF SAID TRACT "A", AS SHOWN ON SAID PLAT OF MIAMI INTERNATIONAL MALL PROPERTIES; THENCE RUN, S01°43'13"E, ALONG THE EASTERLY LINE OF SAID TRACT "A", A DISTANCE OF 761.46 FEET TO THE POINT OF BEGINNING OF THE FOLLOWING DESCRIBED PARCEL OF LAND; THENCE CONTINUE, S01°43'13"E, ALONG THE EASTERLY LINE OF SAID TRACT "A", A DISTANCE OF 458.78 FEET TO A POINT; THENCE, S88°16'47"W, A DISTANCE OF 10.00 FEET TO A POINT; THENCE, N01°43'13"W, ALONG THE EASTERLY BOUNDARY LINE OF PERMANENT ACCESS EASEMENT, AS DESCRIBED IN OFFICIAL RECORD BOOK 11411 AT PAGE 1044 OF THE PUBLIC RECORDS OF MIAMI-DADE COUNTY FLORIDA, A DISTANCE 458.78 FEET TO A POINT; THENCE, N88°16'47"E, A DISTANCE OF 10.00 FEET TO THE POINT OF BEGINNING.

TOGETHER WITH

A PORTION OF ACCESS EASEMENT (RING ROAD)

A PORTION OF PERMANENT ACCESS EASEMENT, AS SHOWN IN OFFICIAL RECORD BOOK 11411, AT PAGE 1044 OF THE PUBLIC RECORDS OF MIAMI-DADE COUNTY, BOUNDED ON THE WEST BY A LINE PERPENDICULAR TO AND 29.00 FEET NORTHEASTERLY FROM THE MOST WESTERLY CORNER OF SEARS SITE (SAID DISTANCE BEING ALONG THE SOUTHEASTERLY LINE OF PERMANENT ACCESS EASEMENT) AND BOUNDED ON THE EAST BY A PERPENDICULAR LINE TO SAID PERMANENT ACCESS EASEMENT AT THE MOST SOUTHEASTERLY CORNER OF SAID JC PENNY SITE.

SURVEYOR'S CERTIFICATION:

I HEREBY CERTIFY THAT THIS "BOUNDARY SURVEY" OF THE PROPERTY DESCRIBED HEREON IS TRUE AND CORRECT TO THE BEST OF MY KNOWLEDGE AND BELIEF AS RECENTLY SURVEYED AND DRAWN UNDER MY SUPERVISION AND DIRECTION. THIS SURVEY COMPLIES WITH STANDARDS OF PRACTICE REQUIREMENTS ADOPTED BY THE FLORIDA STATE BOARD OF SURVEYORS AND MAPPERS PURSUANT TO CHAPTER 5J-17, FLORIDA ADMINISTRATIVE CODE.

THIS CERTIFICATION DOES NOT EXTEND TO ANY UNNAMED PARTIES.

BY:____________________
JOSE G. HERNANDEZ, PRESIDENT
PROFESSIONAL LAND SURVEYOR No. 6952
STATE OF FLORIDA.

THE ELECTRONIC SEAL AND SIGNATURE APPEARING ON THIS SURVEY WAS AUTHORIZED BY JOSE G. HERNANDEZ, PROFESSIONAL LAND SURVEYOR NO. 6952 OF THE STATE OF FLORIDA ON MARCH 24, 2026.

THIS IS A BOUNDARY SURVEY
PROJECT NUMBER: MD-730

BOUNDARY SURVEY

FIELD SURVEY WAS COMPLETED ON: APRIL 29, 2025 AND UPDATED ON SEPTEMBER 23, 2025.

LEGEND AND ABBREVIATIONS

CONCRETE POLE	HANDICAP PAINT MARK
CONCRETE POWER POLE	BABY STROLLER PAINT MARK
CONCRETE LIGHT POLE	UNKNOWN MANHOLE
ALUMINUM POLE	WATER MANHOLE
ALUMINUM LIGHT POLE	SEWER MANHOLE
WOOD POLE	PHONE MANHOLE
WOOD POWER POLE	IRRIGATION MANHOLE
WOOD LIGHT POLE	GREASE TRAP MANHOLE
TB TRAFFIC BOX	GAS MANHOLE
SB STREET LIGHT BOX	FORCEMAIN MANHOLE
PB PHONE BOX	ELECTRICITY MANHOLE
IB IRRIGATION BOX	DRAINAGE MANHOLE
EB ELECTRIC BOX	COMMUNICATION MANHOLE
CB COMMUNICATION BOX	BELL SOUTH MANHOLE
TV CABLE T.V. BOX	PARKING METER
UB UNKNOWN BOX	PARKING KIOSK
TCB TRAFFIC CONTROL BOX	W WATER VALVE
CLEANOUT	S SEWER VALVE
BO BOLLARD	I IRRIGATION VALVE
ARM GATE	G GAS VALVE
ANCHOR	F FORCE MAIN VALVE
WM WATER METER	VACUUM BREAKER ASSEMBLY
IM IRRIGATION METER	SIAMESE CONNECTION
GM GAS METER	POST INDICATOR VALVE
EM ELECTRIC METER	FIRE HYDRANT
SQUARECOLUMN	DOUBLE DETECTOR CHECK VALVE
ROUND COLUMN	BACK FLOW PREVENTOR
MAIL BOX	PROPERTY LINE
IRRIGATION PUMP	CENTERLINE
GP GUARD POST	R/W RIGHT-OF-WAY
GROUND LIGHT	R RADIUS
FLAG POLE	D DELTA ANGLE
DRAINAGE WELL	L ARC DISTANCE
SQUARE DRAINAGE	PCP PERMANENT CONTROL POINT
P6 INLET	PRM PERMANENT REFERENCE MONUMENT
P5 INLET	PB __, PG __ PLAT BOOK AND PAGE
CURB INLET	OHW OVERHEAD UTILITY WIRES
CIRCULAR DRAINAGE	ORB OFFICIAL RECORDS BOOK
CATCH BASIN	CBS CONCRETE BLOCK STRUCTURE
ACCESS MANHOLE	CONC CONCRETE
SWALE INLET	C.L.F. CHAINLINK FENCE
TRAFFIC SIGNAL POLE	W.F. WOOD FENCE
TRAFFIC SIGN	FND. I.P. FOUND IRON PIPE
SURVEILLANCE CAMERA	FND. N&D. FOUND NAIL & BRASS DISC
PEDESTRIAN CROSS SIGNAL	CLR. CLEAR
PAVEMENT ASPHALT	ENCR. ENCROACHMENT
	(D) DEED OR LEGAL DISTANCE
	(M) MEASURED DISTANCE
	(R) RECORD OR PLATTED DISTANCE
	(C) RECORD CALCULATED
	U.E. UTILITY EASEMENT
	CONCRETE
	DENOTES PALM
	DENOTES TREE

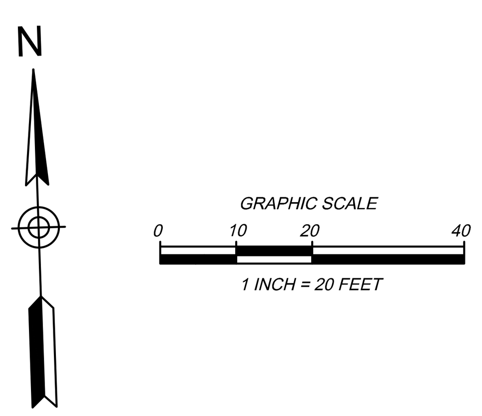

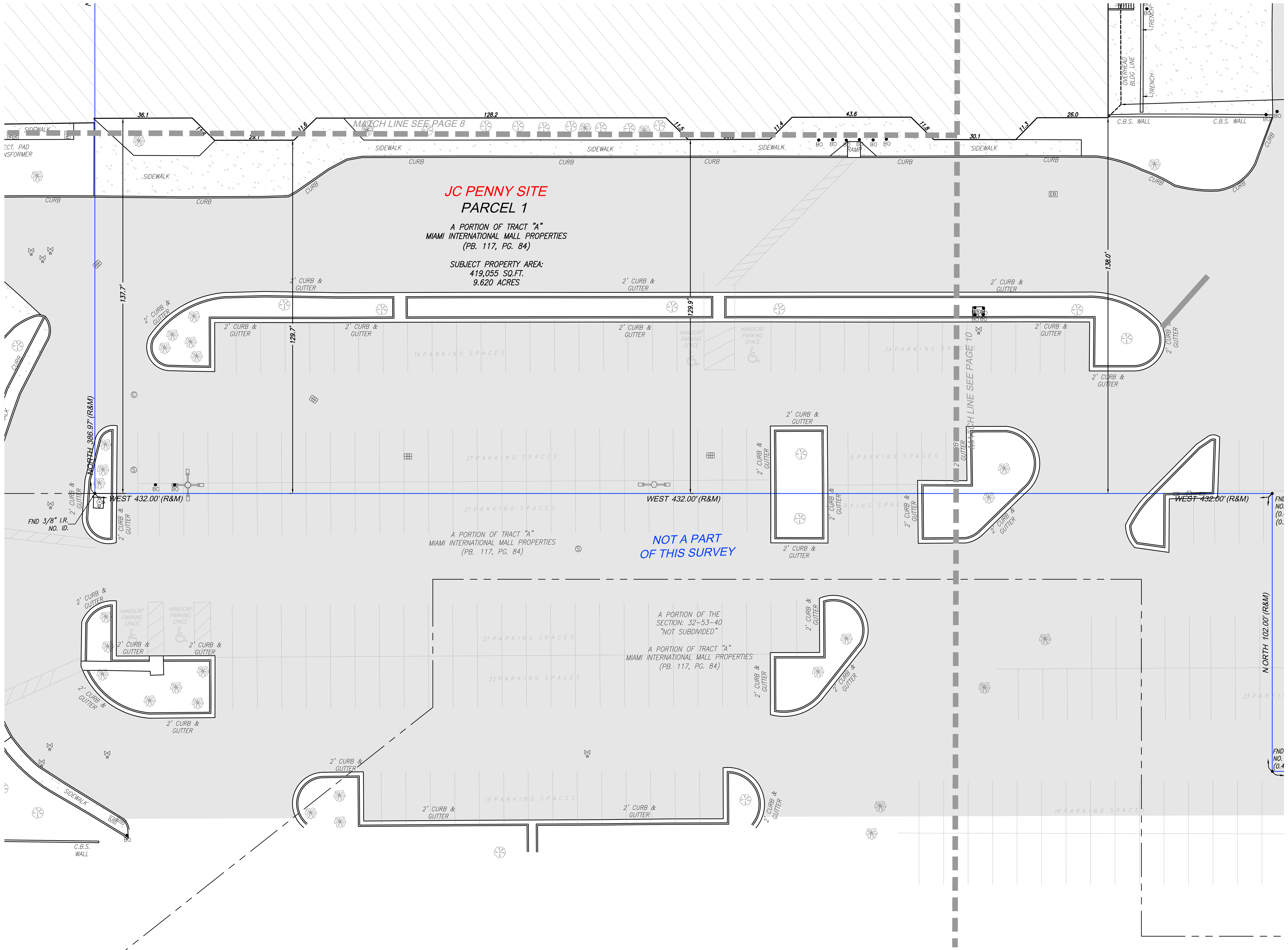

SURVEYOR'S NOTES

1. FIELD SURVEY WAS COMPLETED ON: APRIL 29, 2025 AND UPDATED ON SEPTEMBER 22, 2025.
2. LEGAL DESCRIPTION WAS PROVIDED BY THE CLIENT
3. SUBJECT PROPERTY AREA:
   SEARS SITE: 565,951 sq.ft. (12.992 Acres)
   PARCEL #1 - JC PENNY SITE : 419,055 sq.ft. (9.620 Acres)
   PARCEL K1: 6,276 sq.ft (0.144 Acres)
   PARCEL K2: 9.734 sq.ft (0.223 Acres)
   PARCEL K3: 897 SQ.FT. (0.021 ACRES)
   PARCEL K4: 19,036 SQ.FT. (0.437 ACRES)
   PARCEL K5: 4,414 SQ.FT. (0.101 ACRES)
   A PORTION OF PERMANENT ACCESS EASEMENT:
   90,340 SQ.FT. (2.074 ACRES)
4. BEARINGS BASED ON AN ASSUMED BEARING OF EAST ALONG THE NORTH LINE OF SUBJECT PROPERTY SITE #1.
5. DISTANCES ALONG BOUNDARY LINES, AS SHOWN HEREON, ARE RECORD AND/OR MEASURED UNLESS OTHERWISE NOTED.
6. INTERIOR LOT LINES, AS SHOWN HEREON, ARE FOR INFORMATIONAL PURPOSE ONLY, UNLESS OTHERWISE NOTED.
7. UNDERGROUND FOOTINGS, FOUNDATIONS AND HAVE NOT BEEN LOCATED AT THE TIME OF THIS SURVEY, UNLESS OTHERWISE NOTED.
8. ABOVEGROUND AND/OR VISIBLE UTILITIES HAVE BEEN LOCATED AT THE TIME OF THIS SURVEY, UNLESS OTHERWISE NOTED.
9. SUBJECT PROPERTY HAS A DIRECT PHYSICAL ACCESS TO AND FROM PERMANENT ACCESS EASEMENT.
10. THE SURVEYOR DOES NOT DETERMINE FENCE AND/OR WALL OWNERSHIP.
11. THERE IS A GAP BETWEEN SEARS SITE AND PERMANENT ACCESS EASEMENT.
12. THIS BOUNDARY SURVEY IS SUBJECT TO EASEMENTS, RIGHTS-OF-WAY AND OTHER MATTERS THAT MIGHT BE REFLECTED ON A SEARCH OF TITLE OF THE SUBJECT PROPERTY.

PROPERTY INFORMATION

SEARS SITE

- PROPERTY ADDRESS: 1625 NW 107th AVE
  CITY OF DORAL , MIAMI-DADE, FL 33172
- PARCEL ID: 35-3032-008-0050

JC PENNY SITE

- PROPERTY ADDRESS: 1603 NW 107th AVE
  CITY OF DORAL , MIAMI-DADE, FL 33172
- PARCEL ID: 35-3032-008-0140

CERTIFY TO:

- GREYSTAR DEVELOPMENT EAST, LLC, A DELAWARE LIMITED LIABILITY COMPANY
- FIRST AMERICAN TITLE INSURANCE COMPANY
- GREENBERG TRAURIG, PA

POSSIBLE ENCROACHMENTS

- PARCEL K3 - POSSIBLE ENCROACHMENTS
- A PORTION OF CHAIN LINK FENCE, ALONG THE EAST BOUNDARY LINE, ENCROACH 0.7' FROM ADJOINING LAND ONTO SUBJECT PROPERTY. (SEE PAGE 13)
- A PORTION OF TEMPORARY CHAIN LINK FENCE, ALONG THE SOUTHWESTERLY BOUNDARY LINE, ENCROACH 1.7' FROM SUBJECT PROPERTY ONTO PERMANENT ACCESS EASEMENT. (SEE PAGE 12)

REVISIONS

DATE	JOB No.	REV.	BY:
05/27/25	155116	UPDATE TITLE OF COMMITMENT	C.A.F.
09/23/25	155443-5	UPDATE BOUNDARY SURVEY	C.A.F.
06/11/25	155443-5	UPDATE BOUNDARY SURVEY	C.A.F.

BOUNDARY SURVEY

PREPARED FOR:

GREYSTAR DEVELOPMENT EAST, LLC

LYING AND BEING IN SECTION 32, TOWNSHIP 53 SOUTH, RANGE 40 EAST CITY OF DORAL, MIAMI-DADE COUNTY, FLORIDA.

J.Hernandez & Associates Inc
LAND SURVEYORS AND MAPPERS
CERTIFICATE OF AUTHORIZATION No. LB8092
3300 NW 112th AVE. SUITE #10, DORAL, FL 33172
(P) 305-526-0606 (E) info@jhasurveys.com

DRAWN BY: C.A.F.	CHECKED BY: J.G.H.	JOB NUM: 155116
DATE: 05/01/2025	DATE: 05/01/2025	F.B.: MD-80, PG. 30

LEGAL DESCRIPTION

SEARS SITE

A PARCEL OF LAND LOCATED WITHIN SECTION 32, TOWNSHIP 53 SOUTH, RANGE 40 EAST, LYING AND BEING IN DADE COUNTY, FLORIDA AND FURTHER BOUNDED AND DESCRIBED AS FOLLOWS:

BEGINNING AT A PIPE IN CONCRETE MARKING THE SOUTHWEST CORNER OF SAID SECTION 32, THENCE N 1° 43' 13" W, ALONG THE WEST LINE OF SAID SECTION 32, A DISTANCE OF 2644.15 FEET TO A POINT; THENCE N 89° 38' 52" E, A DISTANCE OF 1228.85 FEET TO A POINT; THENCE S 0° 21' 08" E, A DISTANCE OF 46.51 FEET TO THE PRINCIPAL POINT AND PLACE OF BEGINNING OF THE FOLLOWING DESCRIPTION:

THENCE DUE EAST, A DISTANCE OF 280.00 FEET TO A POINT; THENCE 247.40 FEET ALONG AN ARC TO THE RIGHT, HAVING A RADIUS OF 315.00 FEET AND A CHORD OF 241.09 FEET, BEARING S 67° 30' 00" E TO A POINT; THENCE S 45° 00' 00" E, A DISTANCE OF 297.19 FEET TO A POINT; THENCE S 45° 00' 00" W, A DISTANCE OF 426.52 FEET TO A POINT; THENCE DUE WEST, A DISTANCE OF 472.87 FEET TO A POINT; THENCE S 45° 00' 00" W, A DISTANCE OF 171.25 FEET TO A POINT; THENCE N 45° 00' 00" W, A DISTANCE OF 413.50 FEET TO A POINT; THENCE S 45° 00' 00" W, A DISTANCE OF 16.00 FEET TO A POINT; THENCE N 45° 00' 00" W, A DISTANCE OF 60.63 FEET TO A POINT; THENCE N 45° 00' 00" E, A DISTANCE OF 342.12 FEET TO A POINT; THENCE N 38° 11' 22.8" E, A DISTANCE OF 75.89 FEET TO A POINT; THENCE 267.04 FEET ALONG AN ARC TO THE RIGHT, HAVING A RADIUS OF 340.00 FEET AND A CHORD OF 260.22 FEET, BEARING N 67° 30' 00" E TO THE PRINCIPAL POINT AND PLACE OF BEGINNING.

TOGETHER WITH

JC PENNY SITE
PARCEL 1

A PART OF TRACT A, MIAMI INTERNATIONAL MALL PROPERTIES, ACCORDING TO THE PLAT RECORDED IN PLAT BOOK 117, PAGE 84, PUBLIC RECORDS OF MIAMI-DADE COUNTY, FLORIDA, AND FURTHER BOUNDED AND DESCRIBED AS FOLLOWS:

BEGINNING AT A PIPE IN CONCRETE MARKING THE SOUTHWEST COMER OF SAID SECTION 32, TOWNSHIP 53 SOUTH, RANGE 40 EAST; THENCE NORTH 89° 20' 55" EAST ALONG THE SOUTH LINE OF SECTION 32, A DISTANCE OF 2250.00 FEET TO A POINT; THENCE NORTH 01° 43' 13" WEST A DISTANCE OF 1149.03 FEET TO A POINT; THENCE SOUTH 88° 16' 47" WEST A DISTANCE OF 45.00 FEET TO A POINT; THENCE NORTH 01° 43' 13" WEST A DISTANCE OF 263.14 FEET TO A POINT, SAID POINT BEING THE PRINCIPAL POINT AND PLACE OF BEGINNING OF THE FOLLOWING DESCRIPTION: THENCE DUE WEST A DISTANCE OF 244.73 FEET TO A POINT; THENCE DUE NORTH A DISTANCE OF 102.00 FEET TO A POINT; THENCE DUE WEST A DISTANCE OF 432.00 FEET TO A POINT; THENCE DUE NORTH A DISTANCE OF 386.97 FEET TO A POINT; THENCE NORTH 45° 00' 00" EAST A DISTANCE OF 532.98 FEET TO A POINT; THENCE SOUTH 45° 00' 00" EASI A DISTANCE OF 274.31 FEET TO A POINT; THENCE 237.94 FEET ALONG AN ARC TO THE RIGHT, HAVING A RADIUS OF 315.00 FEET AND A CENTRAL ANGLE OF 43° 16' 47" TO A POINT; THENCE SOUTH 01°43' 13" EAST A DISTANCE OF 458.80 FEET TO A POINT, SAID POINT BEING THE PRINCIPAL POINT AND PLACE OF BEGINNING.

PARCEL 2

EASEMENT RIGHTS AS SET FORTH IN THE MIAMI INTERNATIONAL MALL EASEMENT AND OPERATING AGREEMENT BY AND AMONG SEARS, ROEBUCK AND CO .; ALSTORES REALTY CORPORATION; JORDAN MARSH COMPANY; FEDERATED DEPARTMENT STORES, INC .; ASSOCIATED DRY GOOD CORPORATION; AND WEST DADE COUNTY ASSOCIATES RECORDED APRIL 15, 1982 IN OFFICIAL RECORDS BOOK 11411, PAGE 1044: AS AFFECTED BY FIRST AMENDMENT TO EASEMENT AND OPERATING AGREEMENT BY AND BETWEEN SEARS, ROEBUCK AND CO .; ALLIED STORES GENERAL REAL ESTATE COMPANY; MAAS, INC .: BURDINE'S REAL ESTATE, INC .; J.C. PENNEY COMPANY, INC .; MERVYN'S; AND WEST DADE COUNTY ASSOCIATES, RECORDED OCTOBER 22, 1991 IN OFFICIAL RECORDS BOOK 15238, PAGE 2289; AND BY SECOND AMENDMENT TO EASEMENT AND OPERATING AGREEMENT BY AND BETWEEN SERITAGE SRC FINANCE LLC; MACY'S FLORIDA STORES, LLC; J.C. PENNEY CORPORATION, INC .; KOHL'S DEPARTMENT STORES, INC .; AND WEST DADE COUNTY ASSOCIATES RECORDED AUGUST 30, 2017 IN OFFICIAL RECORDS BOOK 30674, PAGE 1502; AND BY THIRD AMENDMENT TO EASEMENT AND OPERATING AGREEMENT BY AND BETWEEN SERITAGE SRC FINANCE LLC; MACY'S FLORIDA STORES, LLC; J.C. PENNEY CORPORATION, INC .; KOHL'S DEPARTMENT STORES, INC .; AND WEST DADE COUNTY ASSOCIATES RECORDED NOVEMBER 9, 2017 IN OFFICIAL RECORDS BOOK 30752, PAGE 434; AND BY FOURTH AMENDMENT TO EASEMENT AND OPERATING AGREEMENT RECORDED DECEMBER 8, 2017 IN OFFICIAL RECORDS BOOK 30785, PAGE 3451; AND BY FIFTH AMENDMENT TO EASEMENT AND OPERATING AGREEMENT BY AND BETWEEN SERITAGE SRC FINANCE LLC; MACY'S FLORIDA STORES, LLC; J.C. PENNEY CORPORATION, INC .; KOHL'S DEPARTMENT STORES, INC .; AND WEST DADE COUNTY ASSOCIATES RECORDED JUNE 21, 2018 IN OFFICIAL RECORDS BOOK 31023, PAGE 4347, PUBLIC RECORDS OF MIAMI-DADE COUNTY, FLORIDA.

TOGETHER WITH

PARCEL K1

A PORTION OF TRACT "A", MIAMI INTERNATIONAL MALL PROPERTIES ACCORDING TO THE PLAT THEREOF, AS RECORDED IN PLAT BOOK 117, PAGE 84, OF THE PUBLIC RECORDS OF MIAMI-DADE COUNTY, AND BEING MORE PARTICULARLY DESCRIBED AS FOLLOWS.

BEGINNING AT A PIPE IN CONCRETE MARKING THE SOUTHWEST CORNER OF SAID SECTION 32, THENCE N 1° 43' 13" W, ALONG THE WEST LINE OF SAID SECTION 32, A DISTANCE OF 2644.15 FEET TO A POINT; THENCE N 89° 38' 52" E, A DISTANCE OF 1502.00 FEET TO THE POINT OF BEGINNING OF THE FOLLOWING DESCRIBED PARCEL OF LAND; THENCE CONTINUE, N 89° 38' 52" E, A DISTANCE OF 215.66 FEET; THENCE, S 45° 00' 00" W, A DISTANCE OF 53.79 FEET TO A POINT; THENCE, S 45° 00' 00" E, A DISTANCE OF 110.32 FEET TO A POINT; THENCE, S 45° 00' 00" W, A DISTANCE OF 1.42 FEET TO A NON-TANGENT POINT; SAID POINT BEARS OF N 45° 00' 00" E FROM RADIUS POINT OF THE FOLLOWING DESCRIBED CIRCULAR CURVE CONCAVE TO THE SOUTHWEST AND HAVING A RADIUS OF 350.00 FEET; THENCE ALONG SAID CURVE TO THE LEFT FOR AN ARC DISTANCE OF 274.89 FEET THROUGH A CENTRAL ANGLE OF 45°00'00" TO A POINT OF TANGENCY; THENCE, N 90° 00' 00" W, FOR A DISTANCE OF 7.05 FEET TO A POINT (THE LAST TWO COURSES BEING CONCIDENT WITH THE OUTER EDGE OF PERMANENT ACCESS EASEMENT, AS RECORDED IN OFFICIAL RECORD BOOK 11411, AT PAGE 1044, OF THE PUBLIC RECORDS OF MIAMI-DADE COUNTY); THENCE, N 00° 21' 08" W, FOR A DISTANCE OF 13.20 FEET TO THE POINT OF BEGINNING.

TOGETHER WITH

PARCEL K2

A PORTION OF TRACT "A", MIAMI INTERNATIONAL MALL PROPERTIES ACCORDING TO THE PLAT THEREOF, AS RECORDED IN PLAT BOOK 117, PAGE 84, OF THE PUBLIC RECORDS OF MIAMI-DADE COUNTY, AND BEING MORE PARTICULARLY DESCRIBED AS FOLLOWS.

BEGINNING AT A PIPE IN CONCRETE MARKING THE SOUTHWEST CORNER OF SAID SECTION 32, THENCE N 1° 43' 13" W, ALONG THE WEST LINE OF SAID SECTION 32, A DISTANCE OF 2644.15 FEET TO A POINT; THENCE N 89° 38' 52" E, A DISTANCE OF 1717.66 FEET TO A POINT (ALSO KNOWN AS PRINCIPAL POINT); THENCE CONTINUE, N 89° 38' 52" E, A DISTANCE OF 532.59 FEET TO A POINT; THENCE, S 01° 43' 13" E, A DISTANCE OF 476.94 FEET TO THE POINT OF BEGINNING OF THE FOLLOWING DESCRIBED PARCEL OF LAND; THENCE CONTINUE, S 01° 43' 13" E, A DISTANCE OF 284.52 FEET TO A POINT; THENCE, S 88° 16' 47" W, A DISTANCE OF 10.00 FEET TO A POINT OF NON-TANGENT; SAID POINT BEARS OF N 88° 16' 47" E FROM RADIUS POINT OF THE FOLLOWING DESCRIBED CIRCULAR CURVE CONCAVE TO THE SOTHWEST AND HAVING A RADIUS OF 350.00 FEET; THENCE ALONG SAID CURVE TO THE LEFT FOR AN ARC DISTANCE OF 224.62 FEET THROUGH A CENTRAL ANGLE OF 36°46'17" TO A POINT (THE LAST COURSE BEING COINCIDENT WITH THE OUTER EDGE OF PERMANENT ACCESS EASEMENT, AS RECORDED ON SAID OFFICIAL RECORD BOOK 11411, AT PAGE 1044); THENCE, N 45°00'00" E, A DISTANCE OF 109.39 FEET TO THE POINT OF BEGINNING.

TOGETHER WITH

PARCEL K3

A PORTION OF TRACT "A", MIAMI INTERNATIONAL MALL PROPERTIES, ACCORDING TO THE PLAT THEREOF, AS RECORDED IN PLAT BOOK 117 AT PAGE 84 OF THE PUBLIC RECORDS OF MIAMI-DADE COUNTY FLORIDA AND BEING MORE PARTICULARLY DESCRIBED AS FOLLOWS:

COMMENCE AT THE MOST NORTHWESTERLY CORNER OF PARCEL IV, AS DESCRIBED IN OFFICIAL RECORDS BOOK 11411 AT PAGE 1044 OF THE PUBLIC RECORDS OF MIAMI-DADE COUNTY FLORIDA; THENCE RUN SOUTH 45 DEGREES 00 MINUTES 00 SECONDS EAST, ALONG THE SOUTHWESTERLY BOUNDARY LINE OF SAID PARCEL IV, FOR A DISTANCE OF 110.32 FEET TO THE POINT OF BEGINNING OF THE FOLLOWING PARCEL OF LAND; THENCE CONTINUE SOUTH 45 DEGREES 00 MINUTES 00 SECONDS EAST, ALONG SAID SOUTHWESTERLY BOUNDARY LINE OF SAID PARCEL IV, FOR A DISTANCE OF 611.18 FEET; THENCE SOUTH 45 DEGREES 00 MINUTES 00 SECONDS WEST, ALONG THE SOUTHWESTERLY EXTENSION OF THE SOUTHEASTERLY BOUNDARY LINE OF SAID PARCEL IV, FOR A DISTANCE OF 3.67 FEET TO A POINT; SAID POINT BEARS A BEARING OF NORTH 51 DEGREES 30 MINUTES 30 SECONDS EAST FROM THE RADIUS POINT OF THE FOLLOWING DESCRIBED CIRCULAR CURVE CONCAVE TO THE SOUTHWEST, HAVING A RADIUS OF 350.00 FEET AND A CENTRAL ANGLES OF 6 DEGREES 30 MINUTES 29 SECONDS FOR AN ARC DISTANCE OF 39.76 FEET TO A POINT OF TANGENCY; THENCE NORTH 45 DEGREES 00 MINUTES 00 SECONDS WEST FOR A DISTANCE OF 571.51 FEET (LAST MENTIONED TWO COURSE BEING ALONG THE NORTHEASTERLY BOUNDARY LINE OF PERMANENT ACCESS EASEMENT, AS DESCRIBED IN OFFICIAL RECORD BOOK 11411 AT PAGE 1044 OF THE PUBLIC RECORDS OF MIAMI-DADE COUNTY FLORIDA); THENCE NORTH 45 DEGREES 00 MINUTES 00 SECONDS EAST FOR A DISTANCE OF 1.42 FEET TO THE POINT OF BEGINNING.

TOGETHER WITH

PARCEL K4

A PORTION OF TRACT "A", MIAMI INTERNATIONAL MALL PROPERTIES ACCORDING TO THE PLAT THEREOF, AS RECORDED IN PLAT BOOK 117, PAGE 84, OF THE PUBLIC RECORDS OF MIAMI-DADE COUNTY, AND BEING MORE PARTICULARLY DESCRIBED AS FOLLOWS.

COMMENCE AT THE NORTHWEST CORNER OF THE SOUTHWEST 1/4 OF SECTION 32 TOWNSHIP 53 SOUTH, RANGE 40 EAST, AS SHOWN ON SAID PLAT OF MIAMI INTERNATIONAL MALL PROPERTIES; THENCE RUN, N 89° 38' 52" E, ALONG THE NORTH LINE OF SAID SECTION 32, A DISTANCE OF 1055.97 TO THE POINT OF BEGINNING OF THE FOLLOWING DESCRIBED PARCEL OF LAND; THENCE CONTINUE, N 89° 38' 52" E, ALONG THE NORTH LINE OF SAID SECTION 32, A DISTANCE OF 446.03 TO A POINT; THENCE, S 00°21'08"E, A DISTANCE OF 13.20 FEET TO A POINT; THENCE, N 90° 00' 00" W, FOR A DISTANCE OF 272.95 FEET TO A POINT OF CURVATURE OF A CIRCULAR CURVE TO THE LEFT, CONCAVE TO THE SOUTHEAST HAVING A RADIUS OF 375.00 FEET THROUGH A CENTRAL ANGLE OF 44°59'58" FOR AN ARC OF 294.52 FEET TO A POINT OF TANGENCY; THENCE, S45°00'00"W, A DISTANCE OF 388.46 FEET (THE LAST MENTIONED THREE COURSES BEING ALONG THE NORTHEASTERLY BOUNDARY LINE OF PERMANENT ACCESS EASEMENT, AS DESCRIBED IN OFFICIAL RECORD BOOK 11411 AT PAGE 1044 OF THE PUBLIC RECORDS OF MIAMI-DADE COUNTY FLORIDA); THENCE, N45°00'00"W, A DISTANCE OF 20.00 FEET; THENCE, N45°00'00"E, A DISTANCE OF 538.58 FEET TO THE POINT OF BEGINNING (LAST MENTIONED COURSE BEING ALONG THE SOUTHEASTERLY BOUNDARY LINE OF PARCEL VI-E AND ITS SOUTHWESTERLY EXTENSION, AS DESCRIBED IN OFFICIAL RECORD BOOK 11638, AT PAGE 1229 OF THE PUBLIC RECORDS OF MIAMI-DADE COUNTY FLORIDA).

TOGETHER WITH

PARCEL K5

A PORTION OF TRACT "A", MIAMI INTERNATIONAL MALL PROPERTIES ACCORDING TO THE PLAT THEREOF, AS RECORDED IN PLAT BOOK 117, PAGE 84, OF THE PUBLIC RECORDS OF MIAMI-DADE COUNTY, AND BEING MORE PARTICULARLY DESCRIBED AS FOLLOWS.

COMMENCE AT THE NORTHEAST CORNER OF SAID TRACT "A", AS SHOWN ON SAID PLAT OF MIAMI INTERNATIONAL MALL PROPERTIES; THENCE RUN, S01°43'13"E, ALONG THE EASTERLY LINE OF SAID TRACT "A", A DISTANCE OF 761.46 FEET TO THE POINT OF BEGINNING OF THE FOLLOWING DESCRIBED PARCEL OF LAND; THENCE CONTINUE, S01°43'13"E, ALONG THE EASTERLY LINE OF SAID TRACT "A", A DISTANCE OF 458.78 FEET TO A POINT; THENCE, S88°16'47"W, A DISTANCE OF 10.00 FEET TO A POINT; THENCE, N01°43'13"W, ALONG THE EASTERLY BOUNDARY LINE OF PERMANENT ACCESS EASEMENT, AS DESCRIBED IN OFFICIAL RECORD BOOK 11411 AT PAGE 1044 OF THE PUBLIC RECORDS OF MIAMI-DADE COUNTY FLORIDA, A DISTANCE 458.78 FEET TO A POINT; THENCE, N88°16'47"E, A DISTANCE OF 10.00 FEET TO THE POINT OF BEGINNING.

TOGETHER WITH

A PORTION OF ACCESS EASEMENT (RING ROAD)

A PORTION OF PERMANENT ACCESS EASEMENT, AS SHOWN IN OFFICIAL RECORD BOOK 11411, AT PAGE 1044 OF THE PUBLIC RECORDS OF MIAMI-DADE COUNTY, BOUNDED ON THE WEST BY A LINE PERPENDICULAR TO AND 29.00 FEET NORTHEASTERLY FROM THE MOST WESTERLY CORNER OF SEARS SITE (SAID DISTANCE BEING ALONG THE SOUTHEASTERLY LINE OF PERMANENT ACCESS EASEMENT) AND BOUNDED ON THE EAST BY A PERPENDICULAR LINE TO SAID PERMANENT ACCESS EASEMENT AT THE MOST SOUTHEASTERLY CORNER OF SAID JC PENNY SITE.

SURVEYOR'S CERTIFICATION:

I HEREBY CERTIFY THAT THIS "BOUNDARY SURVEY" OF THE PROPERTY DESCRIBED HEREON IS TRUE AND CORRECT TO THE BEST OF MY KNOWLEDGE AND BELIEF AS RECENTLY SURVEYED AND DRAWN UNDER MY SUPERVISION AND DIRECTION. THIS SURVEY COMPLIES WITH STANDARDS OF PRACTICE REQUIREMENTS ADOPTED BY THE FLORIDA STATE BOARD OF SURVEYORS AND MAPPERS PURSUANT TO CHAPTER 5J-17, FLORIDA ADMINISTRATIVE CODE.

THIS CERTIFICATION DOES NOT EXTEND TO ANY UNNAMED PARTIES.

BY:
JOSE G. HERNANDEZ, PRESIDENT
PROFESSIONAL LAND SURVEYOR No. 6952
STATE OF FLORIDA.

THE ELECTRONIC SEAL AND SIGNATURE APPEARING ON THIS SURVEY WAS AUTHORIZED BY JOSE G. HERNANDEZ, PROFESSIONAL LAND SURVEYOR No. 6952 OF THE STATE OF FLORIDA ON MARCH 24, 2026.

THIS IS A BOUNDARY SURVEY
PROJECT NUMBER: MD-730

LEGEND AND ABBREVIATIONS

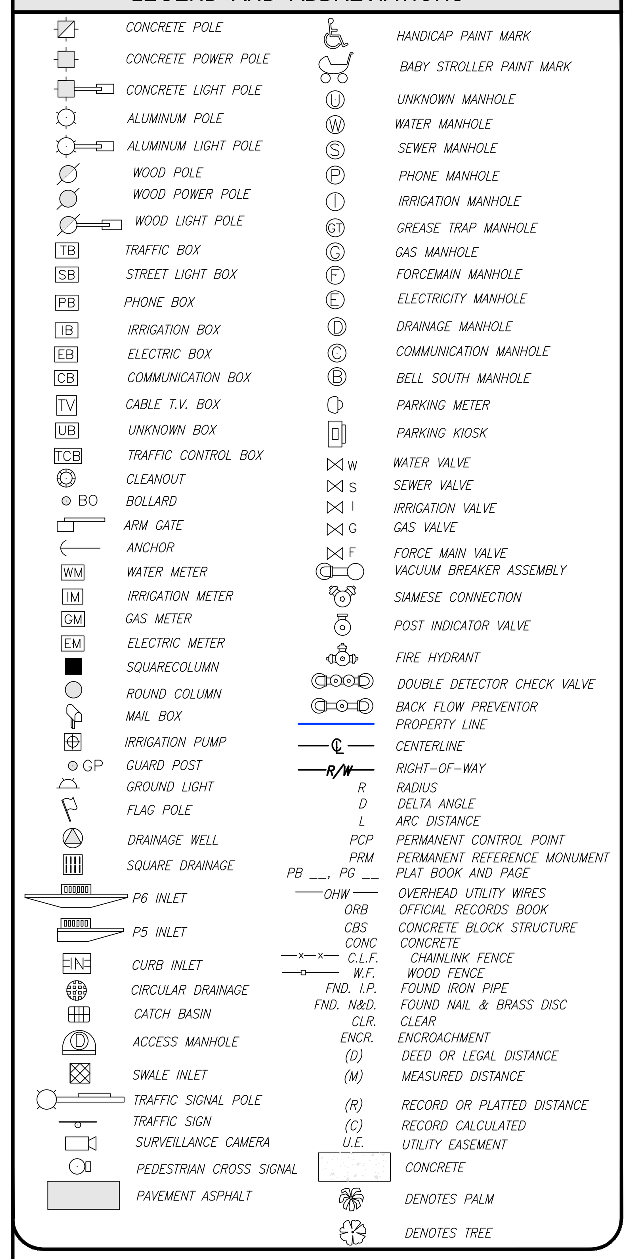

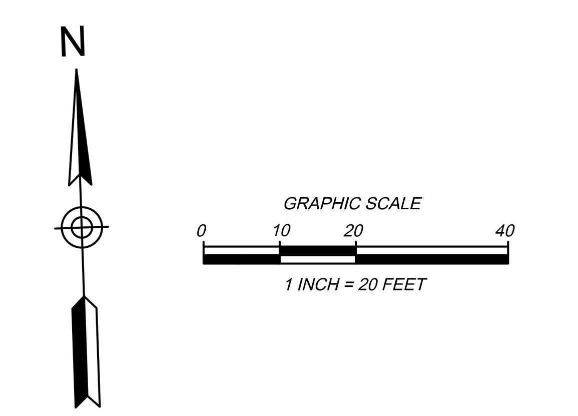

SURVEYOR'S NOTES

1. FIELD SURVEY WAS COMPLETED ON: APRIL 29, 2025 AND UPDATED ON SEPTEMBER 22, 2025.
2. LEGAL DESCRIPTION WAS PROVIDED BY THE CLIENT
3. SUBJECT PROPERTY AREA:
   SEARS SITE: 565,951 sq.ft. (12.992 Acres)
   PARCEL #1 - JC PENNY SITE : 419,055 sq.ft. (9.620 Acres)
   PARCEL K1: 6,276 sq.ft (0.144 Acres)
   PARCEL K2: 9.734 sq.ft (0.223 Acres)
   PARCEL K3: 897 SQ.FT. (0.021 ACRES)
   PARCEL K4: 19,036 SQ.FT. (0.437 ACRES)
   PARCEL K5: 4,414 SQ.FT. (0.101 ACRES)
   A PORTION OF PERMANENT ACCESS EASEMENT:
   90,340 SQ.FT. (2.074 ACRES)
4. BEARINGS BASED ON AN ASSUMED BEARING OF EAST ALONG THE NORTH LINE OF SUBJECT PROPERTY SITE #1.
5. DISTANCES ALONG BOUNDARY LINES, AS SHOWN HEREON, ARE RECORD AND/OR MEASURED UNLESS OTHERWISE NOTED.
6. INTERIOR LOT LINES, AS SHOWN HEREON, ARE FOR INFORMATIONAL PURPOSE ONLY, UNLESS OTHERWISE NOTED.
7. UNDERGROUND FOOTINGS, FOUNDATIONS AND HAVE NOT BEEN LOCATED AT THE TIME OF THIS SURVEY, UNLESS OTHERWISE NOTED.
8. ABOVEGROUND AND/OR VISIBLE UTILITIES HAVE BEEN LOCATED AT THE TIME OF THIS SURVEY, UNLESS OTHERWISE NOTED.
9. SUBJECT PROPERTY HAS A DIRECT PHYSICAL ACCESS TO AND FROM PERMANENT ACCESS EASEMENT.
10. THE SURVEYOR DOES NOT DETERMINE FENCE AND/OR WALL OWNERSHIP.
11. THERE IS A GAP BETWEEN SEARS SITE AND PERMANENT ACCESS EASEMENT.
12. THIS BOUNDARY SURVEY IS SUBJECT TO EASEMENTS, RIGHTS-OF-WAY AND OTHER MATTERS THAT MIGHT BE REFLECTED ON A SEARCH OF TITLE OF THE SUBJECT PROPERTY.

PROPERTY INFORMATION

SEARS SITE

- PROPERTY ADDRESS: 1625 NW 107th AVE
  CITY OF DORAL , MIAMI-DADE, FL 33172
- PARCEL ID : 35-3032-008-0050

JC PENNY SITE

- PROPERTY ADDRESS: 1603 NW 107th AVE
  CITY OF DORAL , MIAMI-DADE, FL 33172
- PARCEL ID : 35-3032-008-0140

CERTIFY TO:

- GREYSTAR DEVELOPMENT EAST, LLC, A DELAWARE LIMITED LIABILITY COMPANY
- FIRST AMERICAN TITLE INSURANCE COMPANY
- GREENBERG TRAURIG, PA

POSSIBLE ENCROACHMENTS

- PARCEL K3 - POSSIBLE ENCROACHMENTS
- A PORTION OF CHAIN LINK FENCE, ALONG THE EAST BOUNDARY LINE, ENCROACH 0.7' FROM ADJOINING LAND ONTO SUBJECT PROPERTY. (SEE PAGE 13)
- A PORTION OF TEMPORARY CHAIN LINK FENCE, ALONG THE SOUTHWESTERLY BOUNDARY LINE, ENCROACH 1.7' FROM SUBJECT PROPERTY ONTO PERMANENT ACCESS EASEMENT. (SEE PAGE 12)

REVISIONS

DATE	JOB No.	REV.	BY:
05/27/25	155116	UPDATE TITLE OF COMMITMENT	C.A.F.
09/23/25	155443-5	UPDATE BOUNDARY SURVEY	C.A.F.
06/11/25	155443-5	UPDATE BOUNDARY SURVEY	C.A.F.

BOUNDARY SURVEY

FIELD SURVEY WAS COMPLETED ON: APRIL 29, 2025 AND UPDATED ON SEPTEMBER 23, 2025.

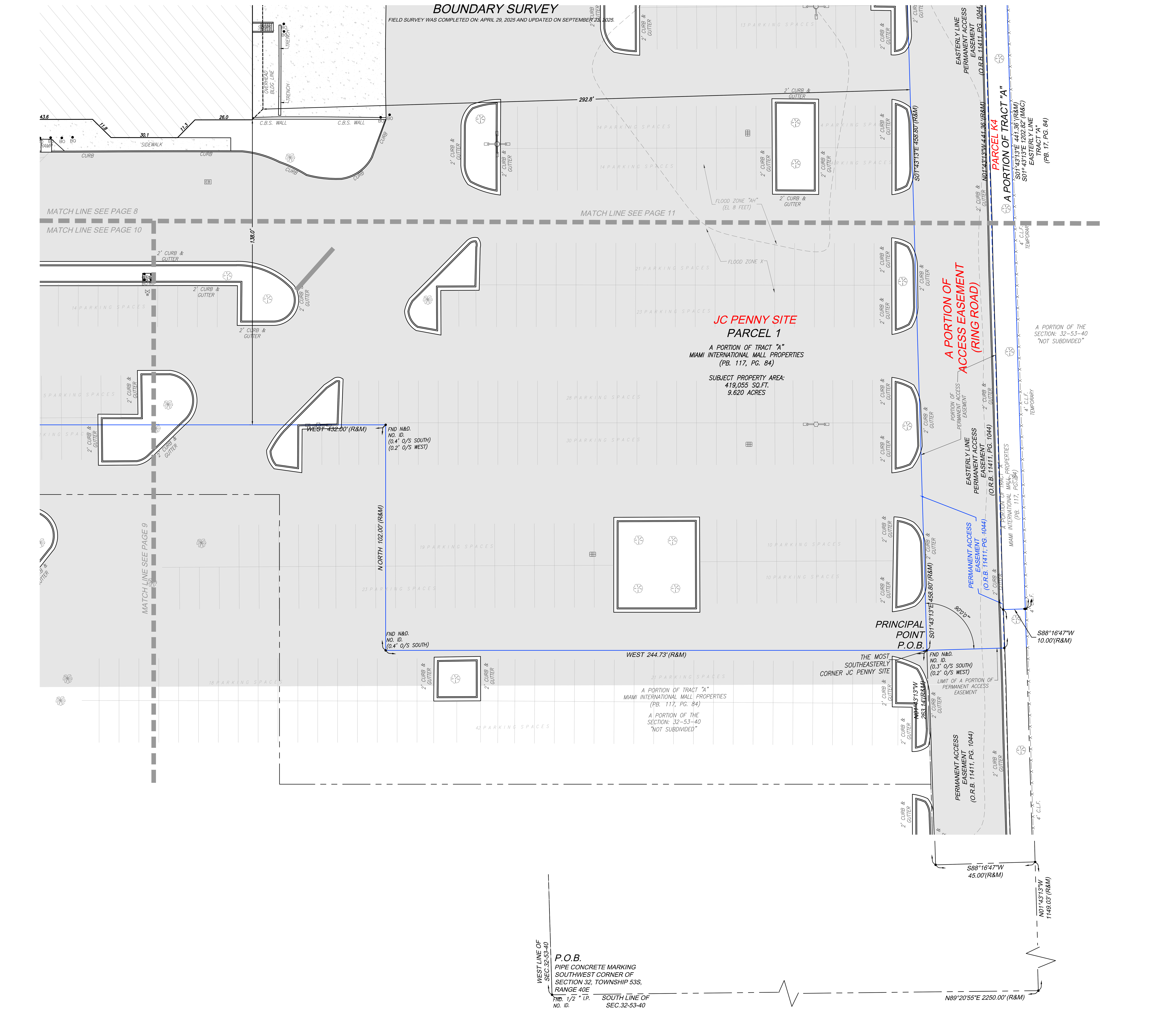

BOUNDARY SURVEY

PREPARED FOR:

GREYSTAR DEVELOPMENT EAST, LLC

LYING AND BEING IN SECTION 32, TOWNSHIP 53 SOUTH, RANGE 40 EAST CITY OF DORAL, MIAMI-DADE COUNTY, FLORIDA.

J.Hernandez & Associates Inc
LAND SURVEYORS AND MAPPERS
CERTIFICATE OF AUTHORIZATION No. LB8092
3300 NW 112th AVE. SUITE #10, DORAL, FL 33172
(P) 305-526-0606 (E) info@jhasurveys.com

DRAWN BY: C.A.F.	CHECKED BY: J.G.H.	JOB NUM: 155116
DATE: 05/01/2025	DATE: 05/01/2025	F.B.: MD-80, PG. 30

LEGAL DESCRIPTION

SEARS SITE

A PARCEL OF LAND LOCATED WITHIN SECTION 32, TOWNSHIP 53 SOUTH, RANGE 40 EAST, LYING AND BEING IN DADE COUNTY, FLORIDA AND FURTHER BOUNDED AND DESCRIBED AS FOLLOWS:

BEGINNING AT A PIPE IN CONCRETE MARKING THE SOUTHWEST CORNER OF SAID SECTION 32, THENCE N 1° 43' 13" W, ALONG THE WEST LINE OF SAID SECTION 32, A DISTANCE OF 2644.15 FEET TO A POINT; THENCE N 89° 38' 52" E, A DISTANCE OF 1228.85 FEET TO A POINT; THENCE S 0° 21' 08" E, A DISTANCE OF 46.51 FEET TO THE PRINCIPAL POINT AND PLACE OF BEGINNING OF THE FOLLOWING DESCRIPTION:

THENCE DUE EAST, A DISTANCE OF 280.00 FEET TO A POINT; THENCE 247.40 FEET ALONG AN ARC TO THE RIGHT, HAVING A RADIUS OF 315.00 FEET AND A CHORD OF 241.09 FEET, BEARING S 67° 30' 00" E TO A POINT; THENCE S 45° 00' 00" E, A DISTANCE OF 297.19 FEET TO A POINT; THENCE S 45° 00' 00" W, A DISTANCE OF 426.52 FEET TO A POINT; THENCE DUE WEST, A DISTANCE OF 472.87 FEET TO A POINT; THENCE S 45° 00' 00" W, A DISTANCE OF 171.25 FEET TO A POINT; THENCE N 45° 00' 00" W, A DISTANCE OF 413.50 FEET TO A POINT; THENCE S 45° 00' 00" W, A DISTANCE OF 16.00 FEET TO A POINT; THENCE N 45° 00' 00" W, A DISTANCE OF 60.63 FEET TO A POINT; THENCE N 45° 00' 00" E, A DISTANCE OF 342.12 FEET TO A POINT; THENCE N 38° 11' 22.8" E, A DISTANCE OF 75.89 FEET TO A POINT; THENCE 267.04 FEET ALONG AN ARC TO THE RIGHT, HAVING A RADIUS OF 340.00 FEET AND A CHORD OF 260.22 FEET, BEARING N 67° 30' 00" E TO THE PRINCIPAL POINT AND PLACE OF BEGINNING.

TOGETHER WITH

JC PENNY SITE
PARCEL 1

A PART OF TRACT A, MIAMI INTERNATIONAL MALL PROPERTIES, ACCORDING TO THE PLAT RECORDED IN PLAT BOOK 117, PAGE 84, PUBLIC RECORDS OF MIAMI-DADE COUNTY, FLORIDA, AND FURTHER BOUNDED AND DESCRIBED AS FOLLOWS:

BEGINNING AT A PIPE IN CONCRETE MARKING THE SOUTHWEST COMER OF SAID SECTION 32, TOWNSHIP 53 SOUTH, RANGE 40 EAST; THENCE NORTH 89° 20' 55" EAST ALONG THE SOUTH LINE OF SECTION 32, A DISTANCE OF 2250.00 FEET TO A POINT; THENCE NORTH 01° 43' 13" WEST A DISTANCE OF 1149.03 FEET TO A POINT; THENCE SOUTH 88° 16' 47" WEST A DISTANCE OF 45.00 FEET TO A POINT; THENCE NORTH 01° 43' 13" WEST A DISTANCE OF 263.14 FEET TO A POINT, SAID POINT BEING THE PRINCIPAL POINT AND PLACE OF BEGINNING OF THE FOLLOWING DESCRIPTION: THENCE DUE WEST A DISTANCE OF 244.73 FEET TO A POINT; THENCE DUE NORTH A DISTANCE OF 102.00 FEET TO A POINT; THENCE DUE WEST A DISTANCE OF 432.00 FEET TO A POINT; THENCE DUE NORTH A DISTANCE OF 386.97 FEET TO A POINT; THENCE NORTH 45° 00' 00" EAST A DISTANCE OF 532.98 FEET TO A POINT; THENCE SOUTH 45° 00' 00" EASI A DISTANCE OF 274.31 FEET TO A POINT; THENCE 237.94 FEET ALONG AN ARC TO THE RIGHT, HAVING A RADIUS OF 315.00 FEET AND A CENTRAL ANGLE OF 43° 16' 47" TO A POINT; THENCE SOUTH 01°43' 13" EAST A DISTANCE OF 458.80 FEET TO A POINT, SAID POINT BEING THE PRINCIPAL POINT AND PLACE OF BEGINNING.

PARCEL 2

EASEMENT RIGHTS AS SET FORTH IN THE MIAMI INTERNATIONAL MALL EASEMENT AND OPERATING AGREEMENT BY AND AMONG SEARS, ROEBUCK AND CO .; ALSTORES REALTY CORPORATION; JORDAN MARSH COMPANY; FEDERATED DEPARTMENT STORES, INC .; ASSOCIATED DRY GOOD CORPORATION; AND WEST DADE COUNTY ASSOCIATES RECORDED APRIL 15, 1982 IN OFFICIAL RECORDS BOOK 11411, PAGE 1044: AS AFFECTED BY FIRST AMENDMENT TO EASEMENT AND OPERATING AGREEMENT BY AND BETWEEN SEARS, ROEBUCK AND CO .; ALLIED STORES GENERAL REAL ESTATE COMPANY; MAAS, INC .: BURDINE'S REAL ESTATE, INC .; J.C. PENNEY COMPANY, INC .; MERVYN'S; AND WEST DADE COUNTY ASSOCIATES, RECORDED OCTOBER 22, 1991 IN OFFICIAL RECORDS BOOK 15238, PAGE 2289; AND BY SECOND AMENDMENT TO EASEMENT AND OPERATING AGREEMENT BY AND BETWEEN SERITAGE SRC FINANCE LLC; MACY'S FLORIDA STORES, LLC; J.C. PENNEY CORPORATION, INC .; KOHL'S DEPARTMENT STORES, INC .; AND WEST DADE COUNTY ASSOCIATES RECORDED AUGUST 30, 2017 IN OFFICIAL RECORDS BOOK 30674, PAGE 1502; AND BY THIRD AMENDMENT TO EASEMENT AND OPERATING AGREEMENT BY AND BETWEEN SERITAGE SRC FINANCE LLC; MACY'S FLORIDA STORES, LLC; J.C. PENNEY CORPORATION, INC .; KOHL'S DEPARTMENT STORES, INC .; AND WEST DADE COUNTY ASSOCIATES RECORDED NOVEMBER 9, 2017 IN OFFICIAL RECORDS BOOK 30752, PAGE 434; AND BY FOURTH AMENDMENT TO EASEMENT AND OPERATING AGREEMENT RECORDED DECEMBER 8, 2017 IN OFFICIAL RECORDS BOOK 30785, PAGE 3451; AND BY FIFTH AMENDMENT TO EASEMENT AND OPERATING AGREEMENT BY AND BETWEEN SERITAGE SRC FINANCE LLC; MACY'S FLORIDA STORES, LLC; J.C. PENNEY CORPORATION, INC .; KOHL'S DEPARTMENT STORES, INC .; AND WEST DADE COUNTY ASSOCIATES RECORDED JUNE 21, 2018 IN OFFICIAL RECORDS BOOK 31023, PAGE 4347, PUBLIC RECORDS OF MIAMI-DADE COUNTY, FLORIDA.

TOGETHER WITH

PARCEL K1

A PORTION OF TRACT "A", MIAMI INTERNATIONAL MALL PROPERTIES ACCORDING TO THE PLAT THEREOF, AS RECORDED IN PLAT BOOK 117, PAGE 84, OF THE PUBLIC RECORDS OF MIAMI-DADE COUNTY, AND BEING MORE PARTICULARLY DESCRIBED AS FOLLOWS.

BEGINNING AT A PIPE IN CONCRETE MARKING THE SOUTHWEST CORNER OF SAID SECTION 32, THENCE N 1° 43' 13" W, ALONG THE WEST LINE OF SAID SECTION 32, A DISTANCE OF 2644.15 FEET TO A POINT; THENCE N 89° 38' 52" E, A DISTANCE OF 1502.00 FEET TO THE POINT OF BEGINNING OF THE FOLLOWING DESCRIBED PARCEL OF LAND; THENCE CONTINUE, N 89° 38' 52" E, A DISTANCE OF 215.66 FEET; THENCE, S 45° 00' 00" W, A DISTANCE OF 53.79 FEET TO A POINT; THENCE, S 45° 00' 00" E, A DISTANCE OF 110.32 FEET TO A POINT; THENCE, S 45° 00' 00" W, A DISTANCE OF 1.42 FEET TO A NON-TANGENT POINT; SAID POINT BEARS OF N 45° 00' 00" E FROM RADIUS POINT OF THE FOLLOWING DESCRIBED CIRCULAR CURVE CONCAVE TO THE SOUTHWEST AND HAVING A RADIUS OF 350.00 FEET; THENCE ALONG SAID CURVE TO THE LEFT FOR AN ARC DISTANCE OF 274.89 FEET THROUGH A CENTRAL ANGLE OF 45°00'00" TO A POINT OF TANGENCY; THENCE, N 90° 00' 00" W, FOR A DISTANCE OF 7.05 FEET TO A POINT (THE LAST TWO COURSES BEING CONCIDENT WITH THE OUTER EDGE OF PERMANENT ACCESS EASEMENT, AS RECORDED IN OFFICIAL RECORD BOOK 11411, AT PAGE 1044, OF THE PUBLIC RECORDS OF MIAMI-DADE COUNTY); THENCE, N 00° 21' 08" W, FOR A DISTANCE OF 13.20 FEET TO THE POINT OF BEGINNING.

TOGETHER WITH

PARCEL K2

A PORTION OF TRACT "A", MIAMI INTERNATIONAL MALL PROPERTIES ACCORDING TO THE PLAT THEREOF, AS RECORDED IN PLAT BOOK 117, PAGE 84, OF THE PUBLIC RECORDS OF MIAMI-DADE COUNTY, AND BEING MORE PARTICULARLY DESCRIBED AS FOLLOWS.

BEGINNING AT A PIPE IN CONCRETE MARKING THE SOUTHWEST CORNER OF SAID SECTION 32, THENCE N 1° 43' 13" W, ALONG THE WEST LINE OF SAID SECTION 32, A DISTANCE OF 2644.15 FEET TO A POINT; THENCE N 89° 38' 52" E, A DISTANCE OF 1717.66 FEET TO A POINT (ALSO KNOWN AS PRINCIPAL POINT); THENCE CONTINUE, N 89° 38' 52" E, A DISTANCE OF 532.59 FEET TO A POINT; THENCE, S 01° 43' 13" E, A DISTANCE OF 476.94 FEET TO THE POINT OF BEGINNING OF THE FOLLOWING DESCRIBED PARCEL OF LAND; THENCE CONTINUE, S 01° 43' 13" E, A DISTANCE OF 284.52 FEET TO A POINT; THENCE, S 88° 16' 47" W, A DISTANCE OF 10.00 FEET TO A POINT OF NON-TANGENT; SAID POINT BEARS OF N 88° 16' 47" E FROM RADIUS POINT OF THE FOLLOWING DESCRIBED CIRCULAR CURVE CONCAVE TO THE SOTHWEST AND HAVING A RADIUS OF 350.00 FEET; THENCE ALONG SAID CURVE TO THE LEFT FOR AN ARC DISTANCE OF 224.62 FEET THROUGH A CENTRAL ANGLE OF 36°46'17" TO A POINT (THE LAST COURSE BEING COINCIDENT WITH THE OUTER EDGE OF PERMANENT ACCESS EASEMENT, AS RECORDED ON SAID OFFICIAL RECORD BOOK 11411, AT PAGE 1044); THENCE, N 45°00'00" E, A DISTANCE OF 109.39 FEET TO THE POINT OF BEGINNING.

TOGETHER WITH

PARCEL K3

A PORTION OF TRACT "A", MIAMI INTERNATIONAL MALL PROPERTIES, ACCORDING TO THE PLAT THEREOF, AS RECORDED IN PLAT BOOK 117 AT PAGE 84 OF THE PUBLIC RECORDS OF MIAMI-DADE COUNTY FLORIDA AND BEING MORE PARTICULARLY DESCRIBED AS FOLLOWS:

COMMENCE AT THE MOST NORTHWESTERLY CORNER OF PARCEL IV, AS DESCRIBED IN OFFICIAL RECORDS BOOK 11411 AT PAGE 1044 OF THE PUBLIC RECORDS OF MIAMI-DADE COUNTY FLORIDA; THENCE RUN SOUTH 45 DEGREES 00 MINUTES 00 SECONDS EAST, ALONG THE SOUTHWESTERLY BOUNDARY LINE OF SAID PARCEL IV, FOR A DISTANCE OF 110.32 FEET TO THE POINT OF BEGINNING OF THE FOLLOWING PARCEL OF LAND; THENCE CONTINUE SOUTH 45 DEGREES 00 MINUTES 00 SECONDS EAST, ALONG SAID SOUTHWESTERLY BOUNDARY LINE OF SAID PARCEL IV, FOR A DISTANCE OF 611.18 FEET; THENCE SOUTH 45 DEGREES 00 MINUTES 00 SECONDS WEST, ALONG THE SOUTHWESTERLY EXTENSION OF THE SOUTHEASTERLY BOUNDARY LINE OF SAID PARCEL IV, FOR A DISTANCE OF 3.67 FEET TO A POINT; SAID POINT BEARS A BEARING OF NORTH 51 DEGREES 30 MINUTES 30 SECONDS EAST FROM THE RADIUS POINT OF THE FOLLOWING DESCRIBED CIRCULAR CURVE CONCAVE TO THE SOUTHWEST, HAVING A RADIUS OF 350.00 FEET AND A CENTRAL ANGLES OF 6 DEGREES 30 MINUTES 29 SECONDS FOR AN ARC DISTANCE OF 39.76 FEET TO A POINT OF TANGENCY; THENCE NORTH 45 DEGREES 00 MINUTES 00 SECONDS WEST FOR A DISTANCE OF 571.51 FEET (LAST MENTIONED TWO COURSE BEING ALONG THE NORTHEASTERLY BOUNDARY LINE OF PERMANENT ACCESS EASEMENT, AS DESCRIBED IN OFFICIAL RECORD BOOK 11411 AT PAGE 1044 OF THE PUBLIC RECORDS OF MIAMI-DADE COUNTY FLORIDA); THENCE NORTH 45 DEGREES 00 MINUTES 00 SECONDS EAST FOR A DISTANCE OF 1.42 FEET TO THE POINT OF BEGINNING.

TOGETHER WITH

PARCEL K4

A PORTION OF TRACT "A", MIAMI INTERNATIONAL MALL PROPERTIES ACCORDING TO THE PLAT THEREOF, AS RECORDED IN PLAT BOOK 117, PAGE 84, OF THE PUBLIC RECORDS OF MIAMI-DADE COUNTY, AND BEING MORE PARTICULARLY DESCRIBED AS FOLLOWS.

COMMENCE AT THE NORTHWEST CORNER OF THE SOUTHWEST 1/4 OF SECTION 32 TOWNSHIP 53 SOUTH, RANGE 40 EAST, AS SHOWN ON SAID PLAT OF MIAMI INTERNATIONAL MALL PROPERTIES; THENCE RUN, N 89° 38' 52" E, ALONG THE NORTH LINE OF SAID SECTION 32, A DISTANCE OF 1055.97 TO THE POINT OF BEGINNING OF THE FOLLOWING DESCRIBED PARCEL OF LAND; THENCE CONTINUE, N 89° 38' 52" E, ALONG THE NORTH LINE OF SAID SECTION 32, A DISTANCE OF 446.03 TO A POINT; THENCE, S 00°21'08"E, A DISTANCE OF 13.20 FEET TO A POINT; THENCE, N 90° 00' 00" W, FOR A DISTANCE OF 272.95 FEET TO A POINT OF CURVATURE OF A CIRCULAR CURVE TO THE LEFT, CONCAVE TO THE SOUTHEAST HAVING A RADIUS OF 375.00 FEET THROUGH A CENTRAL ANGLE OF 44°59'58" FOR AN ARC OF 294.52 FEET TO A POINT OF TANGENCY; THENCE, S45°00'00"W, A DISTANCE OF 388.46 FEET (THE LAST MENTIONED THREE COURSES BEING ALONG THE NORTHEASTERLY BOUNDARY LINE OF PERMANENT ACCESS EASEMENT, AS DESCRIBED IN OFFICIAL RECORD BOOK 11411 AT PAGE 1044 OF THE PUBLIC RECORDS OF MIAMI-DADE COUNTY FLORIDA); THENCE, N45°00'00"W, A DISTANCE OF 20.00 FEET; THENCE, N45°00'00"E, A DISTANCE OF 538.58 FEET TO THE POINT OF BEGINNING (LAST MENTIONED COURSE BEING ALONG THE SOUTHEASTERLY BOUNDARY LINE OF PARCEL VI-E AND ITS SOUTHWESTERLY EXTENSION, AS DESCRIBED IN OFFICIAL RECORD BOOK 11638, AT PAGE 1229 OF THE PUBLIC RECORDS OF MIAMI-DADE COUNTY FLORIDA).

TOGETHER WITH

PARCEL K5

A PORTION OF TRACT "A", MIAMI INTERNATIONAL MALL PROPERTIES ACCORDING TO THE PLAT THEREOF, AS RECORDED IN PLAT BOOK 117, PAGE 84, OF THE PUBLIC RECORDS OF MIAMI-DADE COUNTY, AND BEING MORE PARTICULARLY DESCRIBED AS FOLLOWS.

COMMENCE AT THE NORTHEAST CORNER OF SAID TRACT "A", AS SHOWN ON SAID PLAT OF MIAMI INTERNATIONAL MALL PROPERTIES; THENCE RUN, S01°43'13"E, ALONG THE EASTERLY LINE OF SAID TRACT "A", A DISTANCE OF 761.46 FEET TO THE POINT OF BEGINNING OF THE FOLLOWING DESCRIBED PARCEL OF LAND; THENCE CONTINUE, S01°43'13"E, ALONG THE EASTERLY LINE OF SAID TRACT "A", A DISTANCE OF 458.78 FEET TO A POINT; THENCE, S88°16'47"W, A DISTANCE OF 10.00 FEET TO A POINT; THENCE, N01°43'13"W, ALONG THE EASTERLY BOUNDARY LINE OF PERMANENT ACCESS EASEMENT, AS DESCRIBED IN OFFICIAL RECORD BOOK 11411 AT PAGE 1044 OF THE PUBLIC RECORDS OF MIAMI-DADE COUNTY FLORIDA, A DISTANCE 458.78 FEET TO A POINT; THENCE, N88°16'47"E, A DISTANCE OF 10.00 FEET TO THE POINT OF BEGINNING.

TOGETHER WITH

A PORTION OF ACCESS EASEMENT (RING ROAD)

A PORTION OF PERMANENT ACCESS EASEMENT, AS SHOWN IN OFFICIAL RECORD BOOK 11411, AT PAGE 1044 OF THE PUBLIC RECORDS OF MIAMI-DADE COUNTY, BOUNDED ON THE WEST BY A LINE PERPENDICULAR TO AND 29.00 FEET NORTHEASTERLY FROM THE MOST WESTERLY CORNER OF SEARS SITE (SAID DISTANCE BEING ALONG THE SOUTHEASTERLY LINE OF PERMANENT ACCESS EASEMENT) AND BOUNDED ON THE EAST BY A PERPENDICULAR LINE TO SAID PERMANENT ACCESS EASEMENT AT THE MOST SOUTHEASTERLY CORNER OF SAID JC PENNY SITE.

SURVEYOR'S CERTIFICATION:

I HEREBY CERTIFY THAT THIS "BOUNDARY SURVEY" OF THE PROPERTY DESCRIBED HEREON IS TRUE AND CORRECT TO THE BEST OF MY KNOWLEDGE AND BELIEF AS RECENTLY SURVEYED AND DRAWN UNDER MY SUPERVISION AND DIRECTION. THIS SURVEY COMPLIES WITH STANDARDS OF PRACTICE REQUIREMENTS ADOPTED BY THE FLORIDA STATE BOARD OF SURVEYORS AND MAPPERS PURSUANT TO CHAPTER 5J-17, FLORIDA ADMINISTRATIVE CODE.

THIS CERTIFICATION DOES NOT EXTEND TO ANY UNNAMED PARTIES.

BY:
JOSE G. HERNANDEZ, PRESIDENT
PROFESSIONAL LAND SURVEYOR No. 6952
STATE OF FLORIDA.

THE ELECTRONIC SEAL AND SIGNATURE APPEARING ON THIS SURVEY WAS AUTHORIZED BY JOSE G. HERNANDEZ, PROFESSIONAL LAND SURVEYOR No. 6952 OF THE STATE OF FLORIDA ON MARCH 24, 2026.

THIS IS A BOUNDARY SURVEY
PROJECT NUMBER: MD-730

BOUNDARY SURVEY

FIELD SURVEY WAS COMPLETED ON: APRIL 29, 2025 AND UPDATED ON SEPTEMBER 23, 2025.

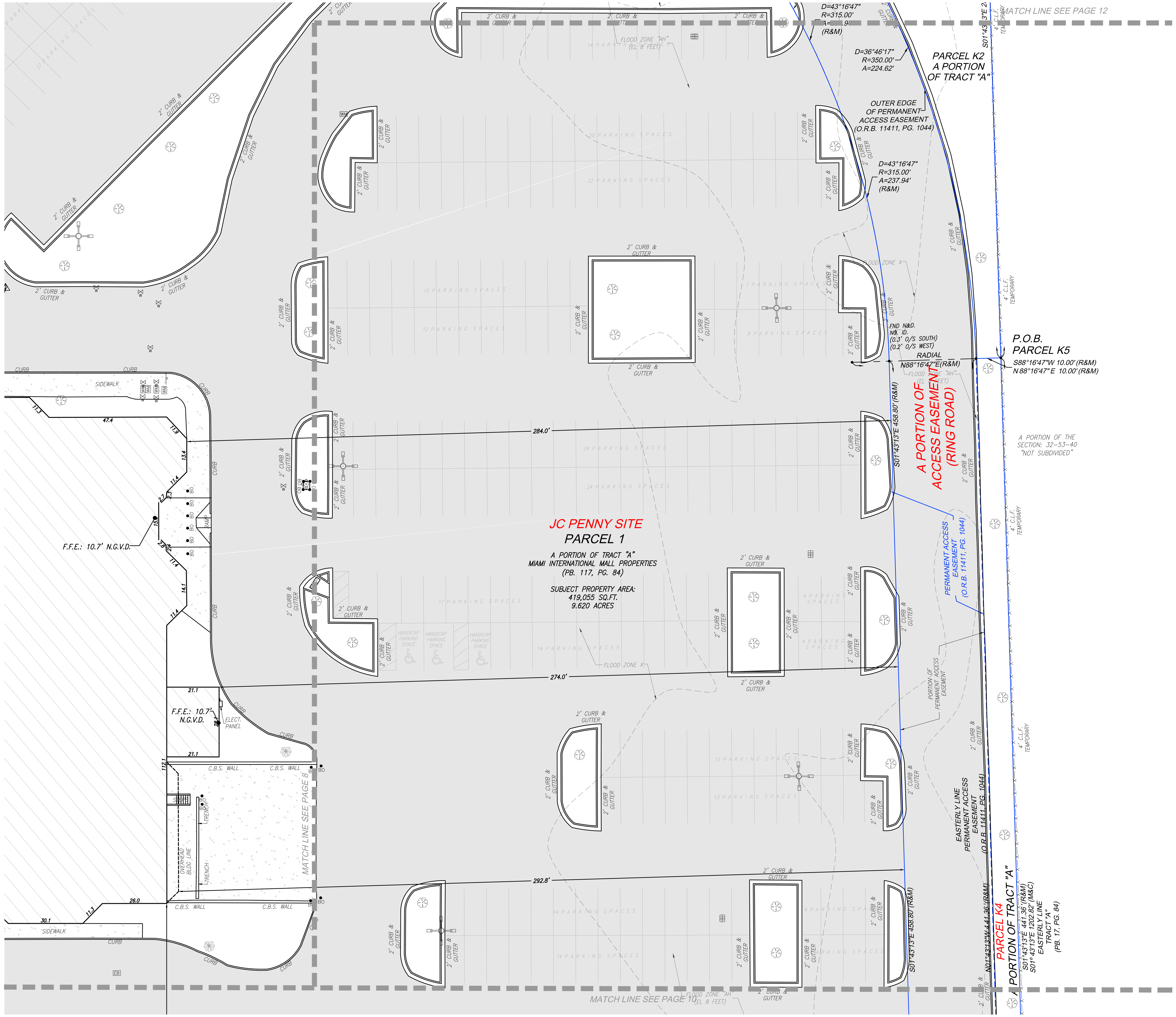

LEGEND AND ABBREVIATIONS

CONCRETE POLE; CONCRETE POWER POLE; CONCRETE LIGHT POLE; ALUMINUM POLE; ALUMINUM LIGHT POLE; WOOD POLE; WOOD POWER POLE; WOOD LIGHT POLE; TRAFFIC BOX; STREET LIGHT BOX; PHONE BOX; IRRIGATION BOX; ELECTRIC BOX; COMMUNICATION BOX; CABLE T.V. BOX; UNKNOWN BOX; TRAFFIC CONTROL BOX; CLEANOUT; BOLLARD; ARM GATE; ANCHOR; WATER METER; IRRIGATION METER; GAS METER; ELECTRIC METER; SQUARE COLUMN; ROUND COLUMN; MAIL BOX; IRRIGATION PUMP; GUARD POST; GROUND LIGHT; FLAG POLE; DRAINAGE WELL; SQUARE DRAINAGE; P6 INLET; P5 INLET; CURB INLET; CIRCULAR DRAINAGE; CATCH BASIN; ACCESS MANHOLE; SWALE INLET; TRAFFIC SIGNAL POLE; TRAFFIC SIGN; SURVEILLANCE CAMERA; PEDESTRIAN CROSS SIGNAL; PAVEMENT ASPHALT

HANDICAP PAINT MARK; BABY STROLLER PAINT MARK; UNKNOWN MANHOLE; WATER MANHOLE; SEWER MANHOLE; PHONE MANHOLE; IRRIGATION MANHOLE; GREASE TRAP MANHOLE; GAS MANHOLE; FORCEMAIN MANHOLE; ELECTRICITY MANHOLE; DRAINAGE MANHOLE; COMMUNICATION MANHOLE; BELL SOUTH MANHOLE; PARKING METER; PARKING KIOSK; WATER VALVE; SEWER VALVE; IRRIGATION VALVE; GAS VALVE; FORCE MAIN VALVE; VACUUM BREAKER ASSEMBLY; SIAMESE CONNECTION; POST INDICATOR VALVE; FIRE HYDRANT; DOUBLE DETECTOR CHECK VALVE; BACK FLOW PREVENTOR; PROPERTY LINE; CENTERLINE

R/W RIGHT-OF-WAY; R RADIUS; D DELTA ANGLE; L ARC DISTANCE; PCP PERMANENT CONTROL POINT; PRM PERMANENT REFERENCE MONUMENT; PB PG PLAT BOOK AND PAGE; OHW OVERHEAD UTILITY WIRES; ORB OFFICIAL RECORDS BOOK; CBS CONCRETE BLOCK STRUCTURE; CONC CONCRETE; C.L.F. CHAINLINK FENCE; W.F. WOOD FENCE; FND. I.P. FOUND IRON PIPE; FND. N&D. FOUND NAIL & BRASS DISC; CLR. CLEAR; ENCR. ENCROACHMENT; (D) DEED OR LEGAL DISTANCE; (M) MEASURED DISTANCE; (R) RECORD OR PLATTED DISTANCE; (C) RECORD CALCULATED; U.E. UTILITY EASEMENT; CONCRETE; DENOTES PALM; DENOTES TREE

GRAPHIC SCALE

0 10 20 40

1 INCH = 20 FEET

SURVEYOR'S NOTES

1. FIELD SURVEY WAS COMPLETED ON: APRIL 29, 2025 AND UPDATED ON SEPTEMBER 22, 2025.
2. LEGAL DESCRIPTION WAS PROVIDED BY THE CLIENT
3. SUBJECT PROPERTY AREA:
   SEARS SITE: 565,951 sq.ft. (12.992 Acres)
   PARCEL #1 - JC PENNY SITE : 419,055 sq.ft. (9.620 Acres)
   PARCEL K1: 6,276 sq.ft (0.144 Acres)
   PARCEL K2: 9.734 sq.ft (0.223 Acres)
   PARCEL K3: 897 SQ.FT. (0.021 ACRES)
   PARCEL K4: 19,036 SQ.FT. (0.437 ACRES)
   PARCEL K5: 4,414 SQ.FT. (0.101 ACRES)
   A PORTION OF PERMANENT ACCESS EASEMENT:
   90,340 SQ.FT. (2.074 ACRES)
4. BEARINGS BASED ON AN ASSUMED BEARING OF EAST ALONG THE NORTH LINE OF SUBJECT PROPERTY SITE #1.
5. DISTANCES ALONG BOUNDARY LINES, AS SHOWN HEREON, ARE RECORD AND/OR MEASURED UNLESS OTHERWISE NOTED.
6. INTERIOR LOT LINES, AS SHOWN HEREON, ARE FOR INFORMATIONAL PURPOSE ONLY, UNLESS OTHERWISE NOTED.
7. UNDERGROUND FOOTINGS, FOUNDATIONS AND HAVE NOT BEEN LOCATED AT THE TIME OF THIS SURVEY, UNLESS OTHERWISE NOTED.
8. ABOVEGROUND AND/OR VISIBLE UTILITIES HAVE BEEN LOCATED AT THE TIME OF THIS SURVEY, UNLESS OTHERWISE NOTED.
9. SUBJECT PROPERTY HAS A DIRECT PHYSICAL ACCESS TO AND FROM PERMANENT ACCESS EASEMENT.
10. THE SURVEYOR DOES NOT DETERMINE FENCE AND/OR WALL OWNERSHIP.
11. THERE IS A GAP BETWEEN SEARS SITE AND PERMANENT ACCESS EASEMENT.
12. THIS BOUNDARY SURVEY IS SUBJECT TO EASEMENTS, RIGHTS-OF-WAY AND OTHER MATTERS THAT MIGHT BE REFLECTED ON A SEARCH OF TITLE OF THE SUBJECT PROPERTY.

PROPERTY INFORMATION

SEARS SITE

- PROPERTY ADDRESS: 1625 NW 107th AVE
  CITY OF DORAL , MIAMI-DADE, FL 33172
- PARCEL ID : 35-3032-008-0050

JC PENNY SITE

- PROPERTY ADDRESS: 1603 NW 107th AVE
  CITY OF DORAL , MIAMI-DADE, FL 33172
- PARCEL ID : 35-3032-008-0140

CERTIFY TO:

- GREYSTAR DEVELOPMENT EAST, LLC, A DELAWARE LIMITED LIABILITY COMPANY
- FIRST AMERICAN TITLE INSURANCE COMPANY
- GREENBERG TRAURIG, PA

POSSIBLE ENCROACHMENTS

- PARCEL K3 - POSSIBLE ENCROACHMENTS
- A PORTION OF CHAIN LINK FENCE, ALONG THE EAST BOUNDARY LINE, ENCROACH 0.7' FROM ADJOINING LAND ONTO SUBJECT PROPERTY. (SEE PAGE 13)
- A PORTION OF TEMPORARY CHAIN LINK FENCE, ALONG THE SOUTHWESTERLY BOUNDARY LINE, ENCROACH 1.7' FROM SUBJECT PROPERTY ONTO PERMANENT ACCESS EASEMENT. (SEE PAGE 12)

REVISIONS

DATE	JOB No.	REV.	BY:
05/27/25	155116	UPDATE TITLE OF COMMITMENT	C.A.F.
09/23/25	155443-5	UPDATE BOUNDARY SURVEY	C.A.F.
06/11/25	155443-5	UPDATE BOUNDARY SURVEY	C.A.F.

BOUNDARY SURVEY

PREPARED FOR:

GREYSTAR DEVELOPMENT EAST, LLC

LYING AND BEING IN SECTION 32, TOWNSHIP 53 SOUTH, RANGE 40 EAST
CITY OF DORAL, MIAMI-DADE COUNTY, FLORIDA.

J.Hernandez & Associates Inc
LAND SURVEYORS AND MAPPERS
CERTIFICATE OF AUTHORIZATION No. LB8092
3300 NW 112th AVE. SUITE #10, DORAL, FL 33172
(P) 305-526-0606 (E) info@jhasurveys.com

DRAWN BY: C.A.F. DATE: 05/01/2025	CHECKED BY: J.G.H. DATE: 05/01/2025	JOB NUM: 155116 F.B.: MD-80, PG. 30

LEGAL DESCRIPTION

SEARS SITE

A PARCEL OF LAND LOCATED WITHIN SECTION 32, TOWNSHIP 53 SOUTH, RANGE 40 EAST, LYING AND BEING IN DADE COUNTY, FLORIDA AND FURTHER BOUNDED AND DESCRIBED AS FOLLOWS:

BEGINNING AT A PIPE IN CONCRETE MARKING THE SOUTHWEST CORNER OF SAID SECTION 32, THENCE N 1° 43' 13" W, ALONG THE WEST LINE OF SAID SECTION 32, A DISTANCE OF 2644.15 FEET TO A POINT; THENCE N 89° 38' 52" E, A DISTANCE OF 1228.85 FEET TO A POINT; THENCE S 0° 21' 08" E, A DISTANCE OF 46.51 FEET TO THE PRINCIPAL POINT AND PLACE OF BEGINNING OF THE FOLLOWING DESCRIPTION:

THENCE DUE EAST, A DISTANCE OF 280.00 FEET TO A POINT; THENCE 247.40 FEET ALONG AN ARC TO THE RIGHT, HAVING A RADIUS OF 315.00 FEET AND A CHORD OF 241.09 FEET, BEARING S 67° 30' 00" E TO A POINT; THENCE S 45° 00' 00" E, A DISTANCE OF 297.19 FEET TO A POINT; THENCE S 45° 00' 00" W, A DISTANCE OF 426.52 FEET TO A POINT; THENCE DUE WEST, A DISTANCE OF 472.87 FEET TO A POINT; THENCE S 45° 00' 00" W, A DISTANCE OF 171.25 FEET TO A POINT; THENCE N 45° 00' 00" W, A DISTANCE OF 413.50 FEET TO A POINT; THENCE S 45° 00' 00" W, A DISTANCE OF 16.00 FEET TO A POINT; THENCE N 45° 00' 00" W, A DISTANCE OF 60.63 FEET TO A POINT; THENCE N 45° 00' 00" E, A DISTANCE OF 342.12 FEET TO A POINT; THENCE N 38° 11' 22.8" E, A DISTANCE OF 75.89 FEET TO A POINT; THENCE 267.04 FEET ALONG AN ARC TO THE RIGHT, HAVING A RADIUS OF 340.00 FEET AND A CHORD OF 260.22 FEET, BEARING N 67° 30' 00" E TO THE PRINCIPAL POINT AND PLACE OF BEGINNING.

TOGETHER WITH

JC PENNY SITE
PARCEL 1

A PART OF TRACT A, MIAMI INTERNATIONAL MALL PROPERTIES, ACCORDING TO THE PLAT RECORDED IN PLAT BOOK 117, PAGE 84, PUBLIC RECORDS OF MIAMI-DADE COUNTY, FLORIDA, AND FURTHER BOUNDED AND DESCRIBED AS FOLLOWS:

BEGINNING AT A PIPE IN CONCRETE MARKING THE SOUTHWEST COMER OF SAID SECTION 32, TOWNSHIP 53 SOUTH, RANGE 40 EAST; THENCE NORTH 89° 20' 55" EAST ALONG THE SOUTH LINE OF SECTION 32, A DISTANCE OF 2250.00 FEET TO A POINT; THENCE NORTH 01° 43' 13" WEST A DISTANCE OF 1149.03 FEET TO A POINT; THENCE SOUTH 88° 16' 47" WEST A DISTANCE OF 45.00 FEET TO A POINT; THENCE NORTH 01° 43' 13" WEST A DISTANCE OF 263.14 FEET TO A POINT, SAID POINT BEING THE PRINCIPAL POINT AND PLACE OF BEGINNING OF THE FOLLOWING DESCRIPTION: THENCE DUE WEST A DISTANCE OF 244.73 FEET TO A POINT; THENCE DUE NORTH A DISTANCE OF 102.00 FEET TO A POINT; THENCE DUE WEST A DISTANCE OF 432.00 FEET TO A POINT; THENCE DUE NORTH A DISTANCE OF 386.97 FEET TO A POINT; THENCE NORTH 45° 00' 00" EAST A DISTANCE OF 532.98 FEET TO A POINT; THENCE SOUTH 45° 00' 00" EASI A DISTANCE OF 274.31 FEET TO A POINT; THENCE 237.94 FEET ALONG AN ARC TO THE RIGHT, HAVING A RADIUS OF 315.00 FEET AND A CENTRAL ANGLE OF 43° 16' 47" TO A POINT; THENCE SOUTH 01°43' 13" EAST A DISTANCE OF 458.80 FEET TO A POINT, SAID POINT BEING THE PRINCIPAL POINT AND PLACE OF BEGINNING.

PARCEL 2

EASEMENT RIGHTS AS SET FORTH IN THE MIAMI INTERNATIONAL MALL EASEMENT AND OPERATING AGREEMENT BY AND AMONG SEARS, ROEBUCK AND CO .; ALSTORES REALTY CORPORATION; JORDAN MARSH COMPANY; FEDERATED DEPARTMENT STORES, INC .; ASSOCIATED DRY GOOD CORPORATION; AND WEST DADE COUNTY ASSOCIATES RECORDED APRIL 15, 1982 IN OFFICIAL RECORDS BOOK 11411, PAGE 1044: AS AFFECTED BY FIRST AMENDMENT TO EASEMENT AND OPERATING AGREEMENT BY AND BETWEEN SEARS, ROEBUCK AND CO .; ALLIED STORES GENERAL REAL ESTATE COMPANY; MAAS, INC .: BURDINE'S REAL ESTATE, INC .; J.C. PENNEY COMPANY, INC .; MERVYN'S; AND WEST DADE COUNTY ASSOCIATES, RECORDED OCTOBER 22, 1991 IN OFFICIAL RECORDS BOOK 15238, PAGE 2289; AND BY SECOND AMENDMENT TO EASEMENT AND OPERATING AGREEMENT BY AND BETWEEN SERITAGE SRC FINANCE LLC; MACY'S FLORIDA STORES, LLC; J.C. PENNEY CORPORATION, INC .; KOHL'S DEPARTMENT STORES, INC .; AND WEST DADE COUNTY ASSOCIATES RECORDED AUGUST 30, 2017 IN OFFICIAL RECORDS BOOK 30674, PAGE 1502; AND BY THIRD AMENDMENT TO EASEMENT AND OPERATING AGREEMENT BY AND BETWEEN SERITAGE SRC FINANCE LLC; MACY'S FLORIDA STORES, LLC; J.C. PENNEY CORPORATION, INC .; KOHL'S DEPARTMENT STORES, INC .; AND WEST DADE COUNTY ASSOCIATES RECORDED NOVEMBER 9, 2017 IN OFFICIAL RECORDS BOOK 30752, PAGE 434; AND BY FOURTH AMENDMENT TO EASEMENT AND OPERATING AGREEMENT RECORDED DECEMBER 8, 2017 IN OFFICIAL RECORDS BOOK 30785, PAGE 3451; AND BY FIFTH AMENDMENT TO EASEMENT AND OPERATING AGREEMENT BY AND BETWEEN SERITAGE SRC FINANCE LLC; MACY'S FLORIDA STORES, LLC; J.C. PENNEY CORPORATION, INC .; KOHL'S DEPARTMENT STORES, INC .; AND WEST DADE COUNTY ASSOCIATES RECORDED JUNE 21, 2018 IN OFFICIAL RECORDS BOOK 31023, PAGE 4347, PUBLIC RECORDS OF MIAMI-DADE COUNTY, FLORIDA.

TOGETHER WITH

PARCEL K1

A PORTION OF TRACT "A", MIAMI INTERNATIONAL MALL PROPERTIES ACCORDING TO THE PLAT THEREOF, AS RECORDED IN PLAT BOOK 117, PAGE 84, OF THE PUBLIC RECORDS OF MIAMI-DADE COUNTY, AND BEING MORE PARTICULARLY DESCRIBED AS FOLLOWS.

BEGINNING AT A PIPE IN CONCRETE MARKING THE SOUTHWEST CORNER OF SAID SECTION 32, THENCE N 1° 43' 13" W, ALONG THE WEST LINE OF SAID SECTION 32, A DISTANCE OF 2644.15 FEET TO A POINT; THENCE N 89° 38' 52" E, A DISTANCE OF 1502.00 FEET TO THE POINT OF BEGINNING OF THE FOLLOWING DESCRIBED PARCEL OF LAND; THENCE CONTINUE, N 89° 38' 52" E, A DISTANCE OF 215.66 FEET; THENCE, S 45° 00' 00" W, A DISTANCE OF 53.79 FEET TO A POINT; THENCE, S 45° 00' 00" E, A DISTANCE OF 110.32 FEET TO A POINT; THENCE, S 45° 00' 00" W, A DISTANCE OF 1.42 FEET TO A NON-TANGENT POINT; SAID POINT BEARS OF N 45° 00' 00" E FROM RADIUS POINT OF THE FOLLOWING DESCRIBED CIRCULAR CURVE CONCAVE TO THE SOUTHWEST AND HAVING A RADIUS OF 350.00 FEET; THENCE ALONG SAID CURVE TO THE LEFT FOR AN ARC DISTANCE OF 274.89 FEET THROUGH A CENTRAL ANGLE OF 45°00'00" TO A POINT OF TANGENCY; THENCE, N 90° 00' 00" W, FOR A DISTANCE OF 7.05 FEET TO A POINT (THE LAST TWO COURSES BEING CONCIDENT WITH THE OUTER EDGE OF PERMANENT ACCESS EASEMENT, AS RECORDED IN OFFICIAL RECORD BOOK 11411, AT PAGE 1044, OF THE PUBLIC RECORDS OF MIAMI-DADE COUNTY); THENCE, N 00° 21' 08" W, FOR A DISTANCE OF 13.20 FEET TO THE POINT OF BEGINNING.

TOGETHER WITH

PARCEL K2

A PORTION OF TRACT "A", MIAMI INTERNATIONAL MALL PROPERTIES ACCORDING TO THE PLAT THEREOF, AS RECORDED IN PLAT BOOK 117, PAGE 84, OF THE PUBLIC RECORDS OF MIAMI-DADE COUNTY, AND BEING MORE PARTICULARLY DESCRIBED AS FOLLOWS.

BEGINNING AT A PIPE IN CONCRETE MARKING THE SOUTHWEST CORNER OF SAID SECTION 32, THENCE N 1° 43' 13" W, ALONG THE WEST LINE OF SAID SECTION 32, A DISTANCE OF 2644.15 FEET TO A POINT; THENCE N 89° 38' 52" E, A DISTANCE OF 1717.66 FEET TO A POINT (ALSO KNOWN AS PRINCIPAL POINT); THENCE CONTINUE, N 89° 38' 52" E, A DISTANCE OF 532.59 FEET TO A POINT; THENCE, S 01° 43' 13" E, A DISTANCE OF 476.94 FEET TO THE POINT OF BEGINNING OF THE FOLLOWING DESCRIBED PARCEL OF LAND; THENCE CONTINUE, S 01° 43' 13" E, A DISTANCE OF 284.52 FEET TO A POINT; THENCE, S 88° 16' 47" W, A DISTANCE OF 10.00 FEET TO A POINT OF NON-TANGENT; SAID POINT BEARS OF N 88° 16' 47" E FROM RADIUS POINT OF THE FOLLOWING DESCRIBED CIRCULAR CURVE CONCAVE TO THE SOTHWEST AND HAVING A RADIUS OF 350.00 FEET; THENCE ALONG SAID CURVE TO THE LEFT FOR AN ARC DISTANCE OF 224.62 FEET THROUGH A CENTRAL ANGLE OF 36°46'17" TO A POINT (THE LAST COURSE BEING COINCIDENT WITH THE OUTER EDGE OF PERMANENT ACCESS EASEMENT, AS RECORDED ON SAID OFFICIAL RECORD BOOK 11411, AT PAGE 1044); THENCE, N 45°00'00" E, A DISTANCE OF 109.39 FEET TO THE POINT OF BEGINNING.

TOGETHER WITH

PARCEL K3

A PORTION OF TRACT "A", MIAMI INTERNATIONAL MALL PROPERTIES, ACCORDING TO THE PLAT THEREOF, AS RECORDED IN PLAT BOOK 117 AT PAGE 84 OF THE PUBLIC RECORDS OF MIAMI-DADE COUNTY FLORIDA AND BEING MORE PARTICULARLY DESCRIBED AS FOLLOWS:

COMMENCE AT THE MOST NORTHWESTERLY CORNER OF PARCEL IV, AS DESCRIBED IN OFFICIAL RECORDS BOOK 11411 AT PAGE 1044 OF THE PUBLIC RECORDS OF MIAMI-DADE COUNTY FLORIDA; THENCE RUN SOUTH 45 DEGREES 00 MINUTES 00 SECONDS EAST, ALONG THE SOUTHWESTERLY BOUNDARY LINE OF SAID PARCEL IV, FOR A DISTANCE OF 110.32 FEET TO THE POINT OF BEGINNING OF THE FOLLOWING PARCEL OF LAND; THENCE CONTINUE SOUTH 45 DEGREES 00 MINUTES 00 SECONDS EAST, ALONG SAID SOUTHWESTERLY BOUNDARY LINE OF SAID PARCEL IV, FOR A DISTANCE OF 611.18 FEET; THENCE SOUTH 45 DEGREES 00 MINUTES 00 SECONDS WEST, ALONG THE SOUTHWESTERLY EXTENSION OF THE SOUTHEASTERLY BOUNDARY LINE OF SAID PARCEL IV, FOR A DISTANCE OF 3.67 FEET TO A POINT; SAID POINT BEARS A BEARING OF NORTH 51 DEGREES 30 MINUTES 30 SECONDS EAST FROM THE RADIUS POINT OF THE FOLLOWING DESCRIBED CIRCULAR CURVE CONCAVE TO THE SOUTHWEST, HAVING A RADIUS OF 350.00 FEET AND A CENTRAL ANGLES OF 6 DEGREES 30 MINUTES 29 SECONDS FOR AN ARC DISTANCE OF 39.76 FEET TO A POINT OF TANGENCY; THENCE NORTH 45 DEGREES 00 MINUTES 00 SECONDS WEST FOR A DISTANCE OF 571.51 FEET (LAST MENTIONED TWO COURSE BEING ALONG THE NORTHEASTERLY BOUNDARY LINE OF PERMANENT ACCESS EASEMENT, AS DESCRIBED IN OFFICIAL RECORD BOOK 11411 AT PAGE 1044 OF THE PUBLIC RECORDS OF MIAMI-DADE COUNTY FLORIDA); THENCE NORTH 45 DEGREES 00 MINUTES 00 SECONDS EAST FOR A DISTANCE OF 1.42 FEET TO THE POINT OF BEGINNING.

TOGETHER WITH

PARCEL K4

A PORTION OF TRACT "A", MIAMI INTERNATIONAL MALL PROPERTIES ACCORDING TO THE PLAT THEREOF, AS RECORDED IN PLAT BOOK 117, PAGE 84, OF THE PUBLIC RECORDS OF MIAMI-DADE COUNTY, AND BEING MORE PARTICULARLY DESCRIBED AS FOLLOWS.

COMMENCE AT THE NORTHWEST CORNER OF THE SOUTHWEST 1/4 OF SECTION 32 TOWNSHIP 53 SOUTH, RANGE 40 EAST, AS SHOWN ON SAID PLAT OF MIAMI INTERNATIONAL MALL PROPERTIES; THENCE RUN, N 89° 38' 52" E, ALONG THE NORTH LINE OF SAID SECTION 32, A DISTANCE OF 1055.97 TO THE POINT OF BEGINNING OF THE FOLLOWING DESCRIBED PARCEL OF LAND; THENCE CONTINUE, N 89° 38' 52" E, ALONG THE NORTH LINE OF SAID SECTION 32, A DISTANCE OF 446.03 TO A POINT; THENCE, S 00°21'08"E, A DISTANCE OF 13.20 FEET TO A POINT; THENCE, N 90° 00' 00" W, FOR A DISTANCE OF 272.95 FEET TO A POINT OF CURVATURE OF A CIRCULAR CURVE TO THE LEFT, CONCAVE TO THE SOUTHEAST HAVING A RADIUS OF 375.00 FEET THROUGH A CENTRAL ANGLE OF 44°59'58" FOR AN ARC OF 294.52 FEET TO A POINT OF TANGENCY; THENCE, S45°00'00"W, A DISTANCE OF 388.46 FEET (THE LAST MENTIONED THREE COURSES BEING ALONG THE NORTHEASTERLY BOUNDARY LINE OF PERMANENT ACCESS EASEMENT, AS DESCRIBED IN OFFICIAL RECORD BOOK 11411 AT PAGE 1044 OF THE PUBLIC RECORDS OF MIAMI-DADE COUNTY FLORIDA); THENCE, N45°00'00"W, A DISTANCE OF 20.00 FEET; THENCE, N45°00'00"E, A DISTANCE OF 538.58 FEET TO THE POINT OF BEGINNING (LAST MENTIONED COURSE BEING ALONG THE SOUTHEASTERLY BOUNDARY LINE OF PARCEL VI-E AND ITS SOUTHWESTERLY EXTENSION, AS DESCRIBED IN OFFICIAL RECORD BOOK 11638, AT PAGE 1229 OF THE PUBLIC RECORDS OF MIAMI-DADE COUNTY FLORIDA).

TOGETHER WITH

PARCEL K5

A PORTION OF TRACT "A", MIAMI INTERNATIONAL MALL PROPERTIES ACCORDING TO THE PLAT THEREOF, AS RECORDED IN PLAT BOOK 117, PAGE 84, OF THE PUBLIC RECORDS OF MIAMI-DADE COUNTY, AND BEING MORE PARTICULARLY DESCRIBED AS FOLLOWS.

COMMENCE AT THE NORTHEAST CORNER OF SAID TRACT "A", AS SHOWN ON SAID PLAT OF MIAMI INTERNATIONAL MALL PROPERTIES; THENCE RUN, S01°43'13"E, ALONG THE EASTERLY LINE OF SAID TRACT "A", A DISTANCE OF 761.46 FEET TO THE POINT OF BEGINNING OF THE FOLLOWING DESCRIBED PARCEL OF LAND; THENCE CONTINUE, S01°43'13"E, ALONG THE EASTERLY LINE OF SAID TRACT "A", A DISTANCE OF 458.78 FEET TO A POINT; THENCE, S88°16'47"W, A DISTANCE OF 10.00 FEET TO A POINT; THENCE, N01°43'13"W, ALONG THE EASTERLY BOUNDARY LINE OF PERMANENT ACCESS EASEMENT, AS DESCRIBED IN OFFICIAL RECORD BOOK 11411 AT PAGE 1044 OF THE PUBLIC RECORDS OF MIAMI-DADE COUNTY FLORIDA, A DISTANCE 458.78 FEET TO A POINT; THENCE, N88°16'47"E, A DISTANCE OF 10.00 FEET TO THE POINT OF BEGINNING.

TOGETHER WITH

A PORTION OF ACCESS EASEMENT (RING ROAD)

A PORTION OF PERMANENT ACCESS EASEMENT, AS SHOWN IN OFFICIAL RECORD BOOK 11411, AT PAGE 1044 OF THE PUBLIC RECORDS OF MIAMI-DADE COUNTY, BOUNDED ON THE WEST BY A LINE PERPENDICULAR TO AND 29.00 FEET NORTHEASTERLY FROM THE MOST WESTERLY CORNER OF SEARS SITE (SAID DISTANCE BEING ALONG THE SOUTHEASTERLY LINE OF PERMANENT ACCESS EASEMENT) AND BOUNDED ON THE EAST BY A PERPENDICULAR LINE TO SAID PERMANENT ACCESS EASEMENT AT THE MOST SOUTHEASTERLY CORNER OF SAID JC PENNY SITE.

SURVEYOR'S CERTIFICATION:

I HEREBY CERTIFY THAT THIS "BOUNDARY SURVEY" OF THE PROPERTY DESCRIBED HEREON IS TRUE AND CORRECT TO THE BEST OF MY KNOWLEDGE AND BELIEF AS RECENTLY SURVEYED AND DRAWN UNDER MY SUPERVISION AND DIRECTION. THIS SURVEY COMPLIES WITH STANDARDS OF PRACTICE REQUIREMENTS ADOPTED BY THE FLORIDA STATE BOARD OF SURVEYORS AND MAPPERS PURSUANT TO CHAPTER 5J-17, FLORIDA ADMINISTRATIVE CODE.

THIS CERTIFICATION DOES NOT EXTEND TO ANY UNNAMED PARTIES.

BY:_______________

JOSE G. HERNANDEZ, PRESIDENT
PROFESSIONAL LAND SURVEYOR No. 6952
STATE OF FLORIDA.

THE ELECTRONIC SEAL AND SIGNATURE APPEARING ON THIS SURVEY WAS AUTHORIZED BY JOSE G. HERNANDEZ, PROFESSIONAL LAND SURVEYOR NO. 6952 OF THE STATE OF FLORIDA ON MARCH 24, 2026.

THIS IS A BOUNDARY SURVEY

PROJECT NUMBER: MD-730

BOUNDARY SURVEY

FIELD SURVEY WAS COMPLETED ON: APRIL 29, 2025 AND UPDATED ON SEPTEMBER 23, 2025.

LEGEND AND ABBREVIATIONS

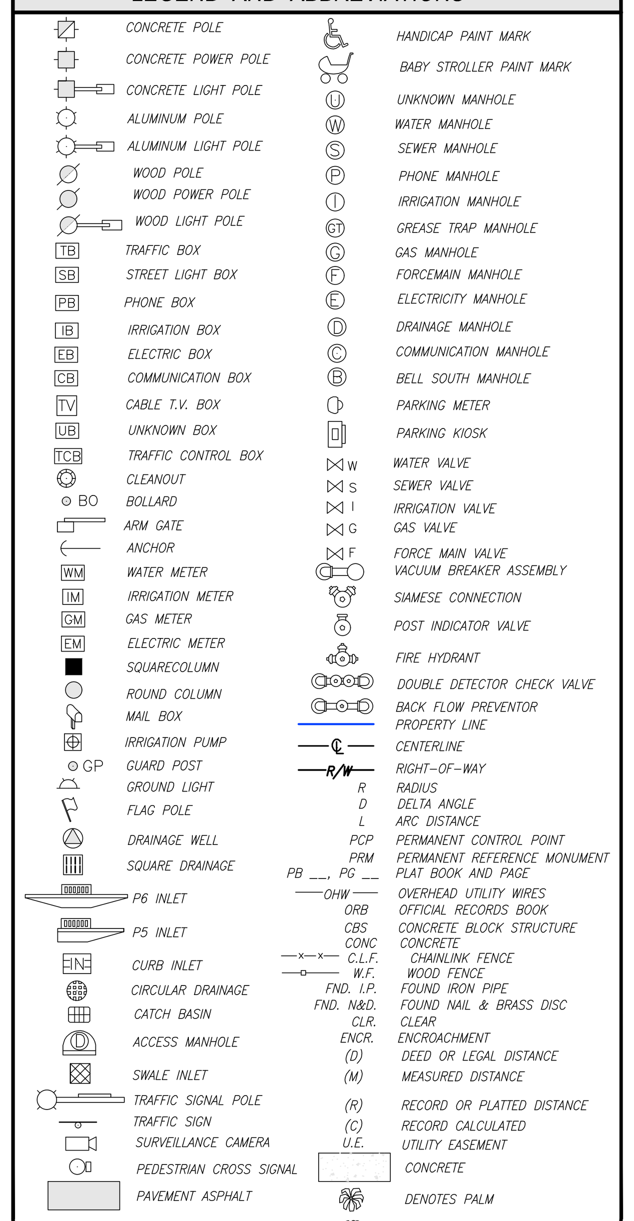

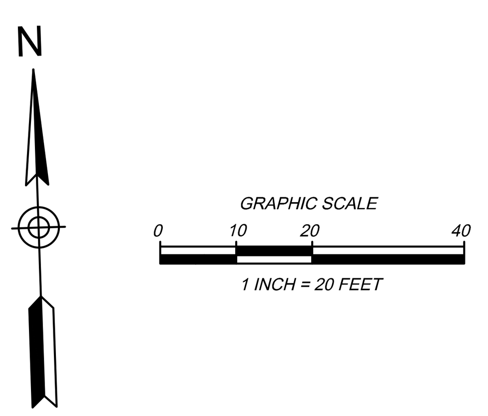

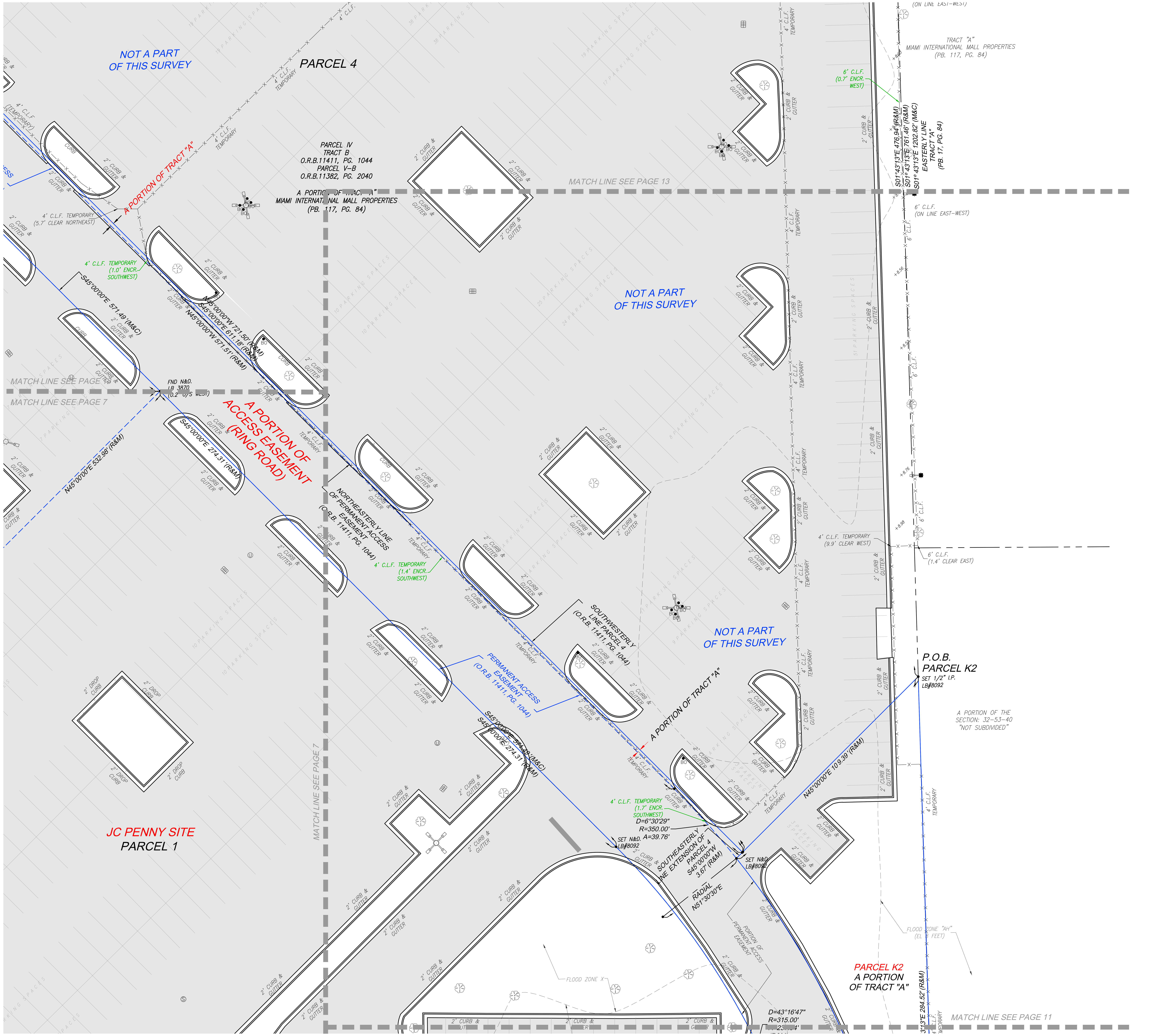

SURVEYOR'S NOTES

1. FIELD SURVEY WAS COMPLETED ON: APRIL 29, 2025 AND UPDATED ON SEPTEMBER 22, 2025.
2. LEGAL DESCRIPTION WAS PROVIDED BY THE CLIENT
3. SUBJECT PROPERTY AREA:
   SEARS SITE: 565,951 sq.ft. (12.992 Acres)
   PARCEL #1 - JC PENNY SITE : 419,055 sq.ft. (9.620 Acres)
   PARCEL K1: 6,276 sq.ft (0.144 Acres)
   PARCEL K2: 9.734 sq.ft (0.223 Acres)
   PARCEL K3: 897 SQ.FT. (0.021 ACRES)
   PARCEL K4: 19,036 SQ.FT. (0.437 ACRES)
   PARCEL K5: 4,414 SQ.FT. (0.101 ACRES)
   A PORTION OF PERMANENT ACCESS EASEMENT:
   90,340 SQ.FT. (2.074 ACRES)
4. BEARINGS BASED ON AN ASSUMED BEARING OF EAST ALONG THE NORTH LINE OF SUBJECT PROPERTY SITE #1.
5. DISTANCES ALONG BOUNDARY LINES, AS SHOWN HEREON, ARE RECORD AND/OR MEASURED UNLESS OTHERWISE NOTED.
6. INTERIOR LOT LINES, AS SHOWN HEREON, ARE FOR INFORMATIONAL PURPOSE ONLY, UNLESS OTHERWISE NOTED.
7. UNDERGROUND FOOTINGS, FOUNDATIONS AND HAVE NOT BEEN LOCATED AT THE TIME OF THIS SURVEY, UNLESS OTHERWISE NOTED.
8. ABOVEGROUND AND/OR VISIBLE UTILITIES HAVE BEEN LOCATED AT THE TIME OF THIS SURVEY, UNLESS OTHERWISE NOTED.
9. SUBJECT PROPERTY HAS A DIRECT PHYSICAL ACCESS TO AND FROM PERMANENT ACCESS EASEMENT.
10. THE SURVEYOR DOES NOT DETERMINE FENCE AND/OR WALL OWNERSHIP.
11. THERE IS A GAP BETWEEN SEARS SITE AND PERMANENT ACCESS EASEMENT.
12. THIS BOUNDARY SURVEY IS SUBJECT TO EASEMENTS, RIGHTS-OF-WAY AND OTHER MATTERS THAT MIGHT BE REFLECTED ON A SEARCH OF TITLE OF THE SUBJECT PROPERTY.

PROPERTY INFORMATION

SEARS SITE

- PROPERTY ADDRESS: 1625 NW 107th AVE
  CITY OF DORAL , MIAMI-DADE, FL 33172
- PARCEL ID : 35-3032-008-0050

JC PENNY SITE

- PROPERTY ADDRESS: 1603 NW 107th AVE
  CITY OF DORAL , MIAMI-DADE, FL 33172
- PARCEL ID : 35-3032-008-0140

CERTIFY TO:

- GREYSTAR DEVELOPMENT EAST, LLC, A DELAWARE LIMITED LIABILITY COMPANY
- FIRST AMERICAN TITLE INSURANCE COMPANY
- GREENBERG TRAURIG, PA

POSSIBLE ENCROACHMENTS

- PARCEL K3 - POSSIBLE ENCROACHMENTS
- A PORTION OF CHAIN LINK FENCE, ALONG THE EAST BOUNDARY LINE, ENCROACH 0.7' FROM ADJOINING LAND ONTO SUBJECT PROPERTY. (SEE PAGE 13)
- A PORTION OF TEMPORARY CHAIN LINK FENCE, ALONG THE SOUTHWESTERLY BOUNDARY LINE, ENCROACH 1.7' FROM SUBJECT PROPERTY ONTO PERMANENT ACCESS EASEMENT. (SEE PAGE 12)

REVISIONS

DATE	JOB No.	REV.	BY:
05/27/25	155116	UPDATE TITLE OF COMMITMENT	C.A.F.
09/23/25	155443–5	UPDATE BOUNDARY SURVEY	C.A.F.
06/11/25	155443–5	UPDATE BOUNDARY SURVEY	C.A.F.

BOUNDARY SURVEY

PREPARED FOR:

GREYSTAR DEVELOPMENT EAST, LLC

LYING AND BEING IN SECTION 32, TOWNSHIP 53 SOUTH, RANGE 40 EAST
CITY OF DORAL, MIAMI-DADE COUNTY, FLORIDA.

J.Hernandez & Associates Inc
LAND SURVEYORS AND MAPPERS
CERTIFICATE OF AUTHORIZATION No. LB8092
3300 NW 112th AVE. SUITE #10, DORAL, FL 33172
(P) 305-526-0606 (E) info@jhasurveys.com

DRAWN BY: C.A.F.	CHECKED BY: J.G.H.	JOB NUM: 155116
DATE: 05/01/2025	DATE: 05/01/2025	F.B.: MD-80, PG. 30

LEGAL DESCRIPTION

SEARS SITE

A PARCEL OF LAND LOCATED WITHIN SECTION 32, TOWNSHIP 53 SOUTH, RANGE 40 EAST, LYING AND BEING IN DADE COUNTY, FLORIDA AND FURTHER BOUNDED AND DESCRIBED AS FOLLOWS:

BEGINNING AT A PIPE IN CONCRETE MARKING THE SOUTHWEST CORNER OF SAID SECTION 32, THENCE N 1° 43' 13" W, ALONG THE WEST LINE OF SAID SECTION 32, A DISTANCE OF 2644.15 FEET TO A POINT; THENCE N 89° 38' 52" E, A DISTANCE OF 1228.85 FEET TO A POINT; THENCE S 0° 21' 08" E, A DISTANCE OF 46.51 FEET TO THE PRINCIPAL POINT AND PLACE OF BEGINNING OF THE FOLLOWING DESCRIPTION:

THENCE DUE EAST, A DISTANCE OF 280.00 FEET TO A POINT; THENCE 247.40 FEET ALONG AN ARC TO THE RIGHT, HAVING A RADIUS OF 315.00 FEET AND A CHORD OF 241.09 FEET, BEARING S 67° 30' 00" E TO A POINT; THENCE S 45° 00' 00" E, A DISTANCE OF 297.19 FEET TO A POINT; THENCE S 45° 00' 00" W, A DISTANCE OF 426.52 FEET TO A POINT; THENCE DUE WEST, A DISTANCE OF 472.87 FEET TO A POINT; THENCE S 45° 00' 00" W, A DISTANCE OF 171.25 FEET TO A POINT; THENCE N 45° 00' 00" W, A DISTANCE OF 413.50 FEET TO A POINT; THENCE S 45° 00' 00" W, A DISTANCE OF 16.00 FEET TO A POINT; THENCE N 45° 00' 00" W, A DISTANCE OF 60.63 FEET TO A POINT; THENCE N 45° 00' 00" E, A DISTANCE OF 342.12 FEET TO A POINT; THENCE N 38° 11' 22.8" E, A DISTANCE OF 75.89 FEET TO A POINT; THENCE 267.04 FEET ALONG AN ARC TO THE RIGHT, HAVING A RADIUS OF 340.00 FEET AND A CHORD OF 260.22 FEET, BEARING N 67° 30' 00" E TO THE PRINCIPAL POINT AND PLACE OF BEGINNING.

TOGETHER WITH

JC PENNY SITE
PARCEL 1

A PART OF TRACT A, MIAMI INTERNATIONAL MALL PROPERTIES, ACCORDING TO THE PLAT RECORDED IN PLAT BOOK 117, PAGE 84, PUBLIC RECORDS OF MIAMI-DADE COUNTY, FLORIDA, AND FURTHER BOUNDED AND DESCRIBED AS FOLLOWS:

BEGINNING AT A PIPE IN CONCRETE MARKING THE SOUTHWEST COMER OF SAID SECTION 32, TOWNSHIP 53 SOUTH, RANGE 40 EAST; THENCE NORTH 89° 20' 55" EAST ALONG THE SOUTH LINE OF SECTION 32, A DISTANCE OF 2250.00 FEET TO A POINT; THENCE NORTH 01° 43' 13" WEST A DISTANCE OF 1149.03 FEET TO A POINT; THENCE SOUTH 88° 16' 47" WEST A DISTANCE OF 45.00 FEET TO A POINT; THENCE NORTH 01° 43' 13" WEST A DISTANCE OF 263.14 FEET TO A POINT, SAID POINT BEING THE PRINCIPAL POINT AND PLACE OF BEGINNING OF THE FOLLOWING DESCRIPTION: THENCE DUE WEST A DISTANCE OF 244.73 FEET TO A POINT; THENCE DUE NORTH A DISTANCE OF 102.00 FEET TO A POINT; THENCE DUE WEST A DISTANCE OF 432.00 FEET TO A POINT; THENCE DUE NORTH A DISTANCE OF 386.97 FEET TO A POINT; THENCE NORTH 45° 00' 00" EAST A DISTANCE OF 532.98 FEET TO A POINT; THENCE SOUTH 45° 00' 00" EASI A DISTANCE OF 274.31 FEET TO A POINT; THENCE 237.94 FEET ALONG AN ARC TO THE RIGHT, HAVING A RADIUS OF 315.00 FEET AND A CENTRAL ANGLE OF 43° 16' 47" TO A POINT; THENCE SOUTH 01°43' 13" EAST A DISTANCE OF 458.80 FEET TO A POINT, SAID POINT BEING THE PRINCIPAL POINT AND PLACE OF BEGINNING.

PARCEL 2

EASEMENT RIGHTS AS SET FORTH IN THE MIAMI INTERNATIONAL MALL EASEMENT AND OPERATING AGREEMENT BY AND AMONG SEARS, ROEBUCK AND CO .; ALSTORES REALTY CORPORATION; JORDAN MARSH COMPANY; FEDERATED DEPARTMENT STORES, INC .; ASSOCIATED DRY GOOD CORPORATION; AND WEST DADE COUNTY ASSOCIATES RECORDED APRIL 15, 1982 IN OFFICIAL RECORDS BOOK 11411, PAGE 1044: AS AFFECTED BY FIRST AMENDMENT TO EASEMENT AND OPERATING AGREEMENT BY AND BETWEEN SEARS, ROEBUCK AND CO .; ALLIED STORES GENERAL REAL ESTATE COMPANY; MAAS, INC .: BURDINE'S REAL ESTATE, INC .; J.C. PENNEY COMPANY, INC .; MERVYN'S; AND WEST DADE COUNTY ASSOCIATES, RECORDED OCTOBER 22, 1991 IN OFFICIAL RECORDS BOOK 15238, PAGE 2289; AND BY SECOND AMENDMENT TO EASEMENT AND OPERATING AGREEMENT BY AND BETWEEN SERITAGE SRC FINANCE LLC; MACY'S FLORIDA STORES, LLC; J.C. PENNEY CORPORATION, INC .; KOHL'S DEPARTMENT STORES, INC .; AND WEST DADE COUNTY ASSOCIATES RECORDED AUGUST 30, 2017 IN OFFICIAL RECORDS BOOK 30674, PAGE 1502; AND BY THIRD AMENDMENT TO EASEMENT AND OPERATING AGREEMENT BY AND BETWEEN SERITAGE SRC FINANCE LLC; MACY'S FLORIDA STORES, LLC; J.C. PENNEY CORPORATION, INC .; KOHL'S DEPARTMENT STORES, INC .; AND WEST DADE COUNTY ASSOCIATES RECORDED NOVEMBER 9, 2017 IN OFFICIAL RECORDS BOOK 30752, PAGE 434; AND BY FOURTH AMENDMENT TO EASEMENT AND OPERATING AGREEMENT RECORDED DECEMBER 8, 2017 IN OFFICIAL RECORDS BOOK 30785, PAGE 3451; AND BY FIFTH AMENDMENT TO EASEMENT AND OPERATING AGREEMENT BY AND BETWEEN SERITAGE SRC FINANCE LLC; MACY'S FLORIDA STORES, LLC; J.C. PENNEY CORPORATION, INC .; KOHL'S DEPARTMENT STORES, INC .; AND WEST DADE COUNTY ASSOCIATES RECORDED JUNE 21, 2018 IN OFFICIAL RECORDS BOOK 31023, PAGE 4347, PUBLIC RECORDS OF MIAMI-DADE COUNTY, FLORIDA.

TOGETHER WITH

PARCEL K1

A PORTION OF TRACT "A", MIAMI INTERNATIONAL MALL PROPERTIES ACCORDING TO THE PLAT THEREOF, AS RECORDED IN PLAT BOOK 117, PAGE 84, OF THE PUBLIC RECORDS OF MIAMI-DADE COUNTY, AND BEING MORE PARTICULARLY DESCRIBED AS FOLLOWS.

BEGINNING AT A PIPE IN CONCRETE MARKING THE SOUTHWEST CORNER OF SAID SECTION 32, THENCE N 1° 43' 13" W, ALONG THE WEST LINE OF SAID SECTION 32, A DISTANCE OF 2644.15 FEET TO A POINT; THENCE N 89° 38' 52" E, A DISTANCE OF 1502.00 FEET TO THE POINT OF BEGINNING OF THE FOLLOWING DESCRIBED PARCEL OF LAND; THENCE CONTINUE, N 89° 38' 52" E, A DISTANCE OF 215.66 FEET; THENCE, S 45° 00' 00" W, A DISTANCE OF 53.79 FEET TO A POINT; THENCE, S 45° 00' 00" E, A DISTANCE OF 110.32 FEET TO A POINT; THENCE, S 45° 00' 00" W, A DISTANCE OF 1.42 FEET TO A NON-TANGENT POINT; SAID POINT BEARS OF N 45° 00' 00" E FROM RADIUS POINT OF THE FOLLOWING DESCRIBED CIRCULAR CURVE CONCAVE TO THE SOUTHWEST AND HAVING A RADIUS OF 350.00 FEET; THENCE ALONG SAID CURVE TO THE LEFT FOR AN ARC DISTANCE OF 274.89 FEET THROUGH A CENTRAL ANGLE OF 45°00'00" TO A POINT OF TANGENCY; THENCE, N 90° 00' 00" W, FOR A DISTANCE OF 7.05 FEET TO A POINT (THE LAST TWO COURSES BEING CONCIDENT WITH THE OUTER EDGE OF PERMANENT ACCESS EASEMENT, AS RECORDED IN OFFICIAL RECORD BOOK 11411, AT PAGE 1044, OF THE PUBLIC RECORDS OF MIAMI-DADE COUNTY); THENCE, N 00° 21' 08" W, FOR A DISTANCE OF 13.20 FEET TO THE POINT OF BEGINNING.

TOGETHER WITH

PARCEL K2

A PORTION OF TRACT "A", MIAMI INTERNATIONAL MALL PROPERTIES ACCORDING TO THE PLAT THEREOF, AS RECORDED IN PLAT BOOK 117, PAGE 84, OF THE PUBLIC RECORDS OF MIAMI-DADE COUNTY, AND BEING MORE PARTICULARLY DESCRIBED AS FOLLOWS.

BEGINNING AT A PIPE IN CONCRETE MARKING THE SOUTHWEST CORNER OF SAID SECTION 32, THENCE N 1° 43' 13" W, ALONG THE WEST LINE OF SAID SECTION 32, A DISTANCE OF 2644.15 FEET TO A POINT; THENCE N 89° 38' 52" E, A DISTANCE OF 1717.66 FEET TO A POINT (ALSO KNOWN AS PRINCIPAL POINT); THENCE CONTINUE, N 89° 38' 52" E, A DISTANCE OF 532.59 FEET TO A POINT; THENCE, S 01° 43' 13" E, A DISTANCE OF 476.94 FEET TO THE POINT OF BEGINNING OF THE FOLLOWING DESCRIBED PARCEL OF LAND; THENCE CONTINUE, S 01° 43' 13" E, A DISTANCE OF 284.52 FEET TO A POINT; THENCE, S 88° 16' 47" W, A DISTANCE OF 10.00 FEET TO A POINT OF NON-TANGENT; SAID POINT BEARS OF N 88° 16' 47" E FROM RADIUS POINT OF THE FOLLOWING DESCRIBED CIRCULAR CURVE CONCAVE TO THE SOTHWEST AND HAVING A RADIUS OF 350.00 FEET; THENCE ALONG SAID CURVE TO THE LEFT FOR AN ARC DISTANCE OF 224.62 FEET THROUGH A CENTRAL ANGLE OF 36°46'17" TO A POINT (THE LAST COURSE BEING COINCIDENT WITH THE OUTER EDGE OF PERMANENT ACCESS EASEMENT, AS RECORDED ON SAID OFFICIAL RECORD BOOK 11411, AT PAGE 1044); THENCE, N 45°00'00" E, A DISTANCE OF 109.39 FEET TO THE POINT OF BEGINNING.

TOGETHER WITH

PARCEL K3

A PORTION OF TRACT "A", MIAMI INTERNATIONAL MALL PROPERTIES, ACCORDING TO THE PLAT THEREOF, AS RECORDED IN PLAT BOOK 117 AT PAGE 84 OF THE PUBLIC RECORDS OF MIAMI-DADE COUNTY FLORIDA AND BEING MORE PARTICULARLY DESCRIBED AS FOLLOWS:

COMMENCE AT THE MOST NORTHWESTERLY CORNER OF PARCEL IV, AS DESCRIBED IN OFFICIAL RECORDS BOOK 11411 AT PAGE 1044 OF THE PUBLIC RECORDS OF MIAMI-DADE COUNTY FLORIDA; THENCE RUN SOUTH 45 DEGREES 00 MINUTES 00 SECONDS EAST, ALONG THE SOUTHWESTERLY BOUNDARY LINE OF SAID PARCEL IV, FOR A DISTANCE OF 110.32 FEET TO THE POINT OF BEGINNING OF THE FOLLOWING PARCEL OF LAND; THENCE CONTINUE SOUTH 45 DEGREES 00 MINUTES 00 SECONDS EAST, ALONG SAID SOUTHWESTERLY BOUNDARY LINE OF SAID PARCEL IV, FOR A DISTANCE OF 611.18 FEET; THENCE SOUTH 45 DEGREES 00 MINUTES 00 SECONDS WEST, ALONG THE SOUTHWESTERLY EXTENSION OF THE SOUTHEASTERLY BOUNDARY LINE OF SAID PARCEL IV, FOR A DISTANCE OF 3.67 FEET TO A POINT; SAID POINT BEARS A BEARING OF NORTH 51 DEGREES 30 MINUTES 30 SECONDS EAST FROM THE RADIUS POINT OF THE FOLLOWING DESCRIBED CIRCULAR CURVE CONCAVE TO THE SOUTHWEST, HAVING A RADIUS OF 350.00 FEET AND A CENTRAL ANGLES OF 6 DEGREES 30 MINUTES 29 SECONDS FOR AN ARC DISTANCE OF 39.76 FEET TO A POINT OF TANGENCY; THENCE NORTH 45 DEGREES 00 MINUTES 00 SECONDS WEST FOR A DISTANCE OF 571.51 FEET (LAST MENTIONED TWO COURSE BEING ALONG THE NORTHEASTERLY BOUNDARY LINE OF PERMANENT ACCESS EASEMENT, AS DESCRIBED IN OFFICIAL RECORD BOOK 11411 AT PAGE 1044 OF THE PUBLIC RECORDS OF MIAMI-DADE COUNTY FLORIDA); THENCE NORTH 45 DEGREES 00 MINUTES 00 SECONDS EAST FOR A DISTANCE OF 1.42 FEET TO THE POINT OF BEGINNING.

TOGETHER WITH

PARCEL K4

A PORTION OF TRACT "A", MIAMI INTERNATIONAL MALL PROPERTIES ACCORDING TO THE PLAT THEREOF, AS RECORDED IN PLAT BOOK 117, PAGE 84, OF THE PUBLIC RECORDS OF MIAMI-DADE COUNTY, AND BEING MORE PARTICULARLY DESCRIBED AS FOLLOWS.

COMMENCE AT THE NORTHWEST CORNER OF THE SOUTHWEST 1/4 OF SECTION 32 TOWNSHIP 53 SOUTH, RANGE 40 EAST, AS SHOWN ON SAID PLAT OF MIAMI INTERNATIONAL MALL PROPERTIES; THENCE RUN, N 89° 38' 52" E, ALONG THE NORTH LINE OF SAID SECTION 32, A DISTANCE OF 1055.97 TO THE POINT OF BEGINNING OF THE FOLLOWING DESCRIBED PARCEL OF LAND; THENCE CONTINUE, N 89° 38' 52" E, ALONG THE NORTH LINE OF SAID SECTION 32, A DISTANCE OF 446.03 TO A POINT; THENCE, S 00°21'08"E, A DISTANCE OF 13.20 FEET TO A POINT; THENCE, N 90° 00' 00" W, FOR A DISTANCE OF 272.95 FEET TO A POINT OF CURVATURE OF A CIRCULAR CURVE TO THE LEFT, CONCAVE TO THE SOUTHEAST HAVING A RADIUS OF 375.00 FEET THROUGH A CENTRAL ANGLE OF 44°59'58" FOR AN ARC OF 294.52 FEET TO A POINT OF TANGENCY; THENCE, S45°00'00"W, A DISTANCE OF 388.46 FEET (THE LAST MENTIONED THREE COURSES BEING ALONG THE NORTHEASTERLY BOUNDARY LINE OF PERMANENT ACCESS EASEMENT, AS DESCRIBED IN OFFICIAL RECORD BOOK 11411 AT PAGE 1044 OF THE PUBLIC RECORDS OF MIAMI-DADE COUNTY FLORIDA); THENCE, N45°00'00"W, A DISTANCE OF 20.00 FEET; THENCE, N45°00'00"E, A DISTANCE OF 538.58 FEET TO THE POINT OF BEGINNING (LAST MENTIONED COURSE BEING ALONG THE SOUTHEASTERLY BOUNDARY LINE OF PARCEL VI-E AND ITS SOUTHWESTERLY EXTENSION, AS DESCRIBED IN OFFICIAL RECORD BOOK 11638, AT PAGE 1229 OF THE PUBLIC RECORDS OF MIAMI-DADE COUNTY FLORIDA).

TOGETHER WITH

PARCEL K5

A PORTION OF TRACT "A", MIAMI INTERNATIONAL MALL PROPERTIES ACCORDING TO THE PLAT THEREOF, AS RECORDED IN PLAT BOOK 117, PAGE 84, OF THE PUBLIC RECORDS OF MIAMI-DADE COUNTY, AND BEING MORE PARTICULARLY DESCRIBED AS FOLLOWS.

COMMENCE AT THE NORTHEAST CORNER OF SAID TRACT "A", AS SHOWN ON SAID PLAT OF MIAMI INTERNATIONAL MALL PROPERTIES; THENCE RUN, S01°43'13"E, ALONG THE EASTERLY LINE OF SAID TRACT "A", A DISTANCE OF 761.46 FEET TO THE POINT OF BEGINNING OF THE FOLLOWING DESCRIBED PARCEL OF LAND; THENCE CONTINUE, S01°43'13"E, ALONG THE EASTERLY LINE OF SAID TRACT "A", A DISTANCE OF 458.78 FEET TO A POINT; THENCE, S88°16'47"W, A DISTANCE OF 10.00 FEET TO A POINT; THENCE, N01°43'13"W, ALONG THE EASTERLY BOUNDARY LINE OF PERMANENT ACCESS EASEMENT, AS DESCRIBED IN OFFICIAL RECORD BOOK 11411 AT PAGE 1044 OF THE PUBLIC RECORDS OF MIAMI-DADE COUNTY FLORIDA, A DISTANCE 458.78 FEET TO A POINT; THENCE, N88°16'47"E, A DISTANCE OF 10.00 FEET TO THE POINT OF BEGINNING.

TOGETHER WITH

A PORTION OF ACCESS EASEMENT (RING ROAD)

A PORTION OF PERMANENT ACCESS EASEMENT, AS SHOWN IN OFFICIAL RECORD BOOK 11411, AT PAGE 1044 OF THE PUBLIC RECORDS OF MIAMI-DADE COUNTY, BOUNDED ON THE WEST BY A LINE PERPENDICULAR TO AND 29.00 FEET NORTHEASTERLY FROM THE MOST WESTERLY CORNER OF SEARS SITE (SAID DISTANCE BEING ALONG THE SOUTHEASTERLY LINE OF PERMANENT ACCESS EASEMENT) AND BOUNDED ON THE EAST BY A PERPENDICULAR LINE TO SAID PERMANENT ACCESS EASEMENT AT THE MOST SOUTHEASTERLY CORNER OF SAID JC PENNY SITE.

SURVEYOR'S CERTIFICATION:

I HEREBY CERTIFY THAT THIS "BOUNDARY SURVEY" OF THE PROPERTY DESCRIBED HEREON IS TRUE AND CORRECT TO THE BEST OF MY KNOWLEDGE AND BELIEF AS RECENTLY SURVEYED AND DRAWN UNDER MY SUPERVISION AND DIRECTION. THIS SURVEY COMPLIES WITH STANDARDS OF PRACTICE REQUIREMENTS ADOPTED BY THE FLORIDA STATE BOARD OF SURVEYORS AND MAPPERS PURSUANT TO CHAPTER 5J-17, FLORIDA ADMINISTRATIVE CODE.

THIS CERTIFICATION DOES NOT EXTEND TO ANY UNNAMED PARTIES.

BY:____________________
JOSE G. HERNANDEZ, PRESIDENT
PROFESSIONAL LAND SURVEYOR No. 6952
STATE OF FLORIDA.

THE ELECTRONIC SEAL AND SIGNATURE APPEARING ON THIS SURVEY WAS AUTHORIZED BY JOSE G. HERNANDEZ, PROFESSIONAL LAND SURVEYOR NO. 6952 OF THE STATE OF FLORIDA ON MARCH 24, 2026.

THIS IS A BOUNDARY SURVEY
PROJECT NUMBER: MD-730

BOUNDARY SURVEY

FIELD SURVEY WAS COMPLETED ON: APRIL 29, 2025 AND UPDATED ON SEPTEMBER 23, 2025.

LEGEND AND ABBREVIATIONS

CONCRETE POLE	HANDICAP PAINT MARK
CONCRETE POWER POLE	BABY STROLLER PAINT MARK
CONCRETE LIGHT POLE	UNKNOWN MANHOLE
ALUMINUM POLE	WATER MANHOLE
ALUMINUM LIGHT POLE	SEWER MANHOLE
WOOD POLE	PHONE MANHOLE
WOOD POWER POLE	IRRIGATION MANHOLE
WOOD LIGHT POLE	GREASE TRAP MANHOLE
TRAFFIC BOX	GAS MANHOLE
STREET LIGHT BOX	FORCEMAIN MANHOLE
PHONE BOX	ELECTRICITY MANHOLE
IRRIGATION BOX	DRAINAGE MANHOLE
ELECTRIC BOX	COMMUNICATION MANHOLE
COMMUNICATION BOX	BELL SOUTH MANHOLE
CABLE T.V. BOX	PARKING METER
UNKNOWN BOX	PARKING KIOSK
TRAFFIC CONTROL BOX	WATER VALVE
CLEANOUT	SEWER VALVE
BOLLARD	IRRIGATION VALVE
ARM GATE	GAS VALVE
ANCHOR	FORCE MAIN VALVE
WATER METER	VACUUM BREAKER ASSEMBLY
IRRIGATION METER	SIAMESE CONNECTION
GAS METER	POST INDICATOR VALVE
ELECTRIC METER	FIRE HYDRANT
SQUARECOLUMN	DOUBLE DETECTOR CHECK VALVE
ROUND COLUMN	BACK FLOW PREVENTOR
MAIL BOX	PROPERTY LINE
IRRIGATION PUMP	CENTERLINE
GUARD POST	RIGHT-OF-WAY
GROUND LIGHT	R RADIUS
FLAG POLE	D DELTA ANGLE
DRAINAGE WELL	L ARC DISTANCE
SQUARE DRAINAGE	PCP PERMANENT CONTROL POINT
P6 INLET	PRM PERMANENT REFERENCE MONUMENT
P5 INLET	PB PG PLAT BOOK AND PAGE
CURB INLET	OHW OVERHEAD UTILITY WIRES
CIRCULAR DRAINAGE	ORB OFFICIAL RECORDS BOOK
CATCH BASIN	CBS CONCRETE BLOCK STRUCTURE
ACCESS MANHOLE	CONC CONCRETE
SWALE INLET	C.L.F. CHAINLINK FENCE
TRAFFIC SIGNAL POLE	W.F. WOOD FENCE
TRAFFIC SIGN	FND. I.P. FOUND IRON PIPE
SURVEILLANCE CAMERA	FND. N&D. FOUND NAIL & BRASS DISC
PEDESTRIAN CROSS SIGNAL	CLR. CLEAR
PAVEMENT ASPHALT	ENCR. ENCROACHMENT
	(S) SEED OR TOTAL DISTANCE
	(M) MEASURED DISTANCE
	(R) RECORD OR PLATTED DISTANCE
	(C) RECORD CALCULATED
	U.E. UTILITY EASEMENT
	CONCRETE
	DENOTES PALM
	DENOTES TREE

N

GRAPHIC SCALE

0 10 20 40

1 INCH = 20 FEET

SURVEYOR'S NOTES

1. FIELD SURVEY WAS COMPLETED ON: APRIL 29, 2025 AND UPDATED ON SEPTEMBER 22, 2025.
2. LEGAL DESCRIPTION WAS PROVIDED BY THE CLIENT
3. SUBJECT PROPERTY AREA:
   SEARS SITE: 565,951 sq.ft. (12.992 Acres)
   PARCEL #1 - JC PENNY SITE : 419,055 sq.ft. (9.620 Acres)
   PARCEL K1: 6,276 sq.ft (0.144 Acres)
   PARCEL K2: 9.734 sq.ft (0.223 Acres)
   PARCEL K3: 897 SQ.FT. (0.021 ACRES)
   PARCEL K4: 19,036 SQ.FT. (0.437 ACRES)
   PARCEL K5: 4,414 SQ.FT. (0.101 ACRES)
   A PORTION OF PERMANENT ACCESS EASEMENT:
   90,340 SQ.FT. (2.074 ACRES)
4. BEARINGS BASED ON AN ASSUMED BEARING OF EAST ALONG THE NORTH LINE OF SUBJECT PROPERTY SITE #1.
5. DISTANCES ALONG BOUNDARY LINES, AS SHOWN HEREON, ARE RECORD AND/OR MEASURED UNLESS OTHERWISE NOTED.
6. INTERIOR LOT LINES, AS SHOWN HEREON, ARE FOR INFORMATIONAL PURPOSE ONLY, UNLESS OTHERWISE NOTED.
7. UNDERGROUND FOOTINGS, FOUNDATIONS AND HAVE NOT BEEN LOCATED AT THE TIME OF THIS SURVEY, UNLESS OTHERWISE NOTED.
8. ABOVEGROUND AND/OR VISIBLE UTILITIES HAVE BEEN LOCATED AT THE TIME OF THIS SURVEY, UNLESS OTHERWISE NOTED.
9. SUBJECT PROPERTY HAS A DIRECT PHYSICAL ACCESS TO AND FROM PERMANENT ACCESS EASEMENT.
10. THE SURVEYOR DOES NOT DETERMINE FENCE AND/OR WALL OWNERSHIP.
11. THERE IS A GAP BETWEEN SEARS SITE AND PERMANENT ACCESS EASEMENT.
12. THIS BOUNDARY SURVEY IS SUBJECT TO EASEMENTS, RIGHTS-OF-WAY AND OTHER MATTERS THAT MIGHT BE REFLECTED ON A SEARCH OF TITLE OF THE SUBJECT PROPERTY.

PROPERTY INFORMATION

SEARS SITE

- PROPERTY ADDRESS: 1625 NW 107th AVE
  CITY OF DORAL , MIAMI-DADE, FL 33172
- PARCEL ID : 35-3032-008-0050

JC PENNY SITE

- PROPERTY ADDRESS: 1603 NW 107th AVE
  CITY OF DORAL , MIAMI-DADE, FL 33172
- PARCEL ID : 35-3032-008-0140

CERTIFY TO:

- GREYSTAR DEVELOPMENT EAST, LLC, A DELAWARE LIMITED LIABILITY COMPANY
- FIRST AMERICAN TITLE INSURANCE COMPANY
- GREENBERG TRAURIG, PA

POSSIBLE ENCROACHMENTS

- PARCEL K3 - POSSIBLE ENCROACHMENTS
- A PORTION OF CHAIN LINK FENCE, ALONG THE EAST BOUNDARY LINE, ENCROACH 0.7' FROM ADJOINING LAND ONTO SUBJECT PROPERTY. (SEE PAGE 13)
- A PORTION OF TEMPORARY CHAIN LINK FENCE, ALONG THE SOUTHWESTERLY BOUNDARY LINE, ENCROACH 1.7' FROM SUBJECT PROPERTY ONTO PERMANENT ACCESS EASEMENT. (SEE PAGE 12)

REVISIONS

DATE	JOB No.	REV.	BY:
05/27/25	155116	UPDATE TITLE OF COMMITMENT	C.A.F.
09/23/25	155443-5	UPDATE BOUNDARY SURVEY	C.A.F.
06/11/25	155443-5	UPDATE BOUNDARY SURVEY	C.A.F.

BOUNDARY SURVEY

PREPARED FOR:

GREYSTAR DEVELOPMENT EAST, LLC

LYING AND BEING IN SECTION 32, TOWNSHIP 53 SOUTH, RANGE 40 EAST CITY OF DORAL, MIAMI-DADE COUNTY, FLORIDA.

J.Hernandez & Associates Inc
LAND SURVEYORS AND MAPPERS
CERTIFICATE OF AUTHORIZATION No. LB8092
3300 NW 112th AVE. SUITE #10, DORAL, FL 33172
(P) 305-526-0606 (E) info@jhasurveys.com

DRAWN BY: C.A.F.	CHECKED BY: J.G.H.	JOB NUM: 155116
DATE: 05/01/2025	DATE: 05/01/2025	F.B.: MD-80, PG. 30

LEGAL DESCRIPTION

SEARS SITE

A PARCEL OF LAND LOCATED WITHIN SECTION 32, TOWNSHIP 53 SOUTH, RANGE 40 EAST, LYING AND BEING IN DADE COUNTY, FLORIDA AND FURTHER BOUNDED AND DESCRIBED AS FOLLOWS:

BEGINNING AT A PIPE IN CONCRETE MARKING THE SOUTHWEST CORNER OF SAID SECTION 32, THENCE N 1° 43' 13" W, ALONG THE WEST LINE OF SAID SECTION 32, A DISTANCE OF 2644.15 FEET TO A POINT; THENCE N 89° 38' 52" E, A DISTANCE OF 1228.85 FEET TO A POINT; THENCE S 0° 21' 08" E, A DISTANCE OF 46.51 FEET TO THE PRINCIPAL POINT AND PLACE OF BEGINNING OF THE FOLLOWING DESCRIPTION:

THENCE DUE EAST, A DISTANCE OF 280.00 FEET TO A POINT; THENCE 247.40 FEET ALONG AN ARC TO THE RIGHT, HAVING A RADIUS OF 315.00 FEET AND A CHORD OF 241.09 FEET, BEARING S 67° 30' 00" E TO A POINT; THENCE S 45° 00' 00" E, A DISTANCE OF 297.19 FEET TO A POINT; THENCE S 45° 00' 00" W, A DISTANCE OF 426.52 FEET TO A POINT; THENCE DUE WEST, A DISTANCE OF 472.87 FEET TO A POINT; THENCE S 45° 00' 00" W, A DISTANCE OF 171.25 FEET TO A POINT; THENCE N 45° 00' 00" W, A DISTANCE OF 413.50 FEET TO A POINT; THENCE S 45° 00' 00" W, A DISTANCE OF 16.00 FEET TO A POINT; THENCE N 45° 00' 00" W, A DISTANCE OF 60.63 FEET TO A POINT; THENCE N 45° 00' 00" E, A DISTANCE OF 342.12 FEET TO A POINT; THENCE N 38° 11' 22.8" E, A DISTANCE OF 75.89 FEET TO A POINT; THENCE 267.04 FEET ALONG AN ARC TO THE RIGHT, HAVING A RADIUS OF 340.00 FEET AND A CHORD OF 260.22 FEET, BEARING N 67° 30' 00" E TO THE PRINCIPAL POINT AND PLACE OF BEGINNING.

TOGETHER WITH

JC PENNY SITE
PARCEL 1

A PART OF TRACT A, MIAMI INTERNATIONAL MALL PROPERTIES, ACCORDING TO THE PLAT RECORDED IN PLAT BOOK 117, PAGE 84, PUBLIC RECORDS OF MIAMI-DADE COUNTY, FLORIDA, AND FURTHER BOUNDED AND DESCRIBED AS FOLLOWS:

BEGINNING AT A PIPE IN CONCRETE MARKING THE SOUTHWEST COMER OF SAID SECTION 32, TOWNSHIP 53 SOUTH, RANGE 40 EAST; THENCE NORTH 89° 20' 55" EAST ALONG THE SOUTH LINE OF SECTION 32, A DISTANCE OF 2250.00 FEET TO A POINT; THENCE NORTH 01° 43' 13" WEST A DISTANCE OF 1149.03 FEET TO A POINT; THENCE SOUTH 88° 16' 47" WEST A DISTANCE OF 45.00 FEET TO A POINT; THENCE NORTH 01° 43' 13" WEST A DISTANCE OF 263.14 FEET TO A POINT, SAID POINT BEING THE PRINCIPAL POINT AND PLACE OF BEGINNING OF THE FOLLOWING DESCRIPTION: THENCE DUE WEST A DISTANCE OF 244.73 FEET TO A POINT; THENCE DUE NORTH A DISTANCE OF 102.00 FEET TO A POINT; THENCE DUE WEST A DISTANCE OF 432.00 FEET TO A POINT; THENCE DUE NORTH A DISTANCE OF 386.97 FEET TO A POINT; THENCE NORTH 45° 00' 00" EAST A DISTANCE OF 532.98 FEET TO A POINT; THENCE SOUTH 45° 00' 00" EASI A DISTANCE OF 274.31 FEET TO A POINT; THENCE 237.94 FEET ALONG AN ARC TO THE RIGHT, HAVING A RADIUS OF 315.00 FEET AND A CENTRAL ANGLE OF 43° 16' 47" TO A POINT; THENCE SOUTH 01°43' 13" EAST A DISTANCE OF 458.80 FEET TO A POINT, SAID POINT BEING THE PRINCIPAL POINT AND PLACE OF BEGINNING.

PARCEL 2

EASEMENT RIGHTS AS SET FORTH IN THE MIAMI INTERNATIONAL MALL EASEMENT AND OPERATING AGREEMENT BY AND AMONG SEARS, ROEBUCK AND CO .; ALSTORES REALTY CORPORATION; JORDAN MARSH COMPANY; FEDERATED DEPARTMENT STORES, INC .; ASSOCIATED DRY GOOD CORPORATION; AND WEST DADE COUNTY ASSOCIATES RECORDED APRIL 15, 1982 IN OFFICIAL RECORDS BOOK 11411, PAGE 1044: AS AFFECTED BY FIRST AMENDMENT TO EASEMENT AND OPERATING AGREEMENT BY AND BETWEEN SEARS, ROEBUCK AND CO .; ALLIED STORES GENERAL REAL ESTATE COMPANY; MAAS, INC .: BURDINE'S REAL ESTATE, INC .; J.C. PENNEY COMPANY, INC .; MERVYN'S; AND WEST DADE COUNTY ASSOCIATES, RECORDED OCTOBER 22, 1991 IN OFFICIAL RECORDS BOOK 15238, PAGE 2289; AND BY SECOND AMENDMENT TO EASEMENT AND OPERATING AGREEMENT BY AND BETWEEN SERITAGE SRC FINANCE LLC; MACY'S FLORIDA STORES, LLC; J.C. PENNEY CORPORATION, INC .; KOHL'S DEPARTMENT STORES, INC .; AND WEST DADE COUNTY ASSOCIATES RECORDED AUGUST 30, 2017 IN OFFICIAL RECORDS BOOK 30674, PAGE 1502; AND BY THIRD AMENDMENT TO EASEMENT AND OPERATING AGREEMENT BY AND BETWEEN SERITAGE SRC FINANCE LLC; MACY'S FLORIDA STORES, LLC; J.C. PENNEY CORPORATION, INC .; KOHL'S DEPARTMENT STORES, INC .; AND WEST DADE COUNTY ASSOCIATES RECORDED NOVEMBER 9, 2017 IN OFFICIAL RECORDS BOOK 30752, PAGE 434; AND BY FOURTH AMENDMENT TO EASEMENT AND OPERATING AGREEMENT RECORDED DECEMBER 8, 2017 IN OFFICIAL RECORDS BOOK 30785, PAGE 3451; AND BY FIFTH AMENDMENT TO EASEMENT AND OPERATING AGREEMENT BY AND BETWEEN SERITAGE SRC FINANCE LLC; MACY'S FLORIDA STORES, LLC; J.C. PENNEY CORPORATION, INC .; KOHL'S DEPARTMENT STORES, INC .; AND WEST DADE COUNTY ASSOCIATES RECORDED JUNE 21, 2018 IN OFFICIAL RECORDS BOOK 31023, PAGE 4347, PUBLIC RECORDS OF MIAMI-DADE COUNTY, FLORIDA.

TOGETHER WITH

PARCEL K1

A PORTION OF TRACT “A”, MIAMI INTERNATIONAL MALL PROPERTIES ACCORDING TO THE PLAT THEREOF, AS RECORDED IN PLAT BOOK 117, PAGE 84, OF THE PUBLIC RECORDS OF MIAMI-DADE COUNTY, AND BEING MORE PARTICULARLY DESCRIBED AS FOLLOWS.

BEGINNING AT A PIPE IN CONCRETE MARKING THE SOUTHWEST CORNER OF SAID SECTION 32, THENCE N 1° 43' 13" W, ALONG THE WEST LINE OF SAID SECTION 32, A DISTANCE OF 2644.15 FEET TO A POINT; THENCE N 89° 38' 52" E, A DISTANCE OF 1502.00 FEET TO THE POINT OF BEGINNING OF THE FOLLOWING DESCRIBED PARCEL OF LAND; THENCE CONTINUE, N 89° 38' 52" E, A DISTANCE OF 215.66 FEET; THENCE, S 45° 00' 00" W, A DISTANCE OF 53.79 FEET TO A POINT; THENCE, S 45° 00' 00" E, A DISTANCE OF 110.32 FEET TO A POINT; THENCE, S 45° 00' 00" W, A DISTANCE OF 1.42 FEET TO A NON-TANGENT POINT; SAID POINT BEARS OF N 45° 00' 00" E FROM RADIUS POINT OF THE FOLLOWING DESCRIBED CIRCULAR CURVE CONCAVE TO THE SOUTHWEST AND HAVING A RADIUS OF 350.00 FEET; THENCE ALONG SAID CURVE TO THE LEFT FOR AN ARC DISTANCE OF 274.89 FEET THROUGH A CENTRAL ANGLE OF 45°00'00” TO A POINT OF TANGENCY; THENCE, N 90° 00' 00" W, FOR A DISTANCE OF 7.05 FEET TO A POINT (THE LAST TWO COURSES BEING CONCIDENT WITH THE OUTER EDGE OF PERMANENT ACCESS EASEMENT, AS RECORDED IN OFFICIAL RECORD BOOK 11411, AT PAGE 1044, OF THE PUBLIC RECORDS OF MIAMI-DADE COUNTY); THENCE, N 00° 21' 08" W, FOR A DISTANCE OF 13.20 FEET TO THE POINT OF BEGINNING.

TOGETHER WITH

PARCEL K2

A PORTION OF TRACT “A”, MIAMI INTERNATIONAL MALL PROPERTIES ACCORDING TO THE PLAT THEREOF, AS RECORDED IN PLAT BOOK 117, PAGE 84, OF THE PUBLIC RECORDS OF MIAMI-DADE COUNTY, AND BEING MORE PARTICULARLY DESCRIBED AS FOLLOWS.

BEGINNING AT A PIPE IN CONCRETE MARKING THE SOUTHWEST CORNER OF SAID SECTION 32, THENCE N 1° 43' 13" W, ALONG THE WEST LINE OF SAID SECTION 32, A DISTANCE OF 2644.15 FEET TO A POINT; THENCE N 89° 38' 52" E, A DISTANCE OF 1717.66 FEET TO A POINT (ALSO KNOWN AS PRINCIPAL POINT); THENCE CONTINUE, N 89° 38' 52" E, A DISTANCE OF 532.59 FEET TO A POINT; THENCE, S 01° 43' 13" E, A DISTANCE OF 476.94 FEET TO THE POINT OF BEGINNING OF THE FOLLOWING DESCRIBED PARCEL OF LAND; THENCE CONTINUE, S 01° 43' 13" E, A DISTANCE OF 284.52 FEET TO A POINT; THENCE, S 88° 16' 47" W, A DISTANCE OF 10.00 FEET TO A POINT OF NON-TANGENT; SAID POINT BEARS OF N 88° 16' 47" E FROM RADIUS POINT OF THE FOLLOWING DESCRIBED CIRCULAR CURVE CONCAVE TO THE SOTHWEST AND HAVING A RADIUS OF 350.00 FEET; THENCE ALONG SAID CURVE TO THE LEFT FOR AN ARC DISTANCE OF 224.62 FEET THROUGH A CENTRAL ANGLE OF 36°46'17” TO A POINT (THE LAST COURSE BEING COINCIDENT WITH THE OUTER EDGE OF PERMANENT ACCESS EASEMENT, AS RECORDED ON SAID OFFICIAL RECORD BOOK 11411, AT PAGE 1044); THENCE, N 45°00'00” E, A DISTANCE OF 109.39 FEET TO THE POINT OF BEGINNING.

TOGETHER WITH

PARCEL K3

A PORTION OF TRACT "A", MIAMI INTERNATIONAL MALL PROPERTIES, ACCORDING TO THE PLAT THEREOF, AS RECORDED IN PLAT BOOK 117 AT PAGE 84 OF THE PUBLIC RECORDS OF MIAMI-DADE COUNTY FLORIDA AND BEING MORE PARTICULARLY DESCRIBED AS FOLLOWS:

COMMENCE AT THE MOST NORTHWESTERLY CORNER OF PARCEL IV, AS DESCRIBED IN OFFICIAL RECORDS BOOK 11411 AT PAGE 1044 OF THE PUBLIC RECORDS OF MIAMI-DADE COUNTY FLORIDA; THENCE RUN SOUTH 45 DEGREES 00 MINUTES 00 SECONDS EAST, ALONG THE SOUTHWESTERLY BOUNDARY LINE OF SAID PARCEL IV, FOR A DISTANCE OF 110.32 FEET TO THE POINT OF BEGINNING OF THE FOLLOWING PARCEL OF LAND; THENCE CONTINUE SOUTH 45 DEGREES 00 MINUTES 00 SECONDS EAST, ALONG SAID SOUTHWESTERLY BOUNDARY LINE OF SAID PARCEL IV, FOR A DISTANCE OF 611.18 FEET; THENCE SOUTH 45 DEGREES 00 MINUTES 00 SECONDS WEST, ALONG THE SOUTHWESTERLY EXTENSION OF THE SOUTHEASTERLY BOUNDARY LINE OF SAID PARCEL IV, FOR A DISTANCE OF 3.67 FEET TO A POINT; SAID POINT BEARS A BEARING OF NORTH 51 DEGREES 30 MINUTES 30 SECONDS EAST FROM THE RADIUS POINT OF THE FOLLOWING DESCRIBED CIRCULAR CURVE CONCAVE TO THE SOUTHWEST, HAVING A RADIUS OF 350.00 FEET AND A CENTRAL ANGLES OF 6 DEGREES 30 MINUTES 29 SECONDS FOR AN ARC DISTANCE OF 39.76 FEET TO A POINT OF TANGENCY; THENCE NORTH 45 DEGREES 00 MINUTES 00 SECONDS WEST FOR A DISTANCE OF 571.51 FEET (LAST MENTIONED TWO COURSE BEING ALONG THE NORTHEASTERLY BOUNDARY LINE OF PERMANENT ACCESS EASEMENT, AS DESCRIBED IN OFFICIAL RECORD BOOK 11411 AT PAGE 1044 OF THE PUBLIC RECORDS OF MIAMI-DADE COUNTY FLORIDA); THENCE NORTH 45 DEGREES 00 MINUTES 00 SECONDS EAST FOR A DISTANCE OF 1.42 FEET TO THE POINT OF BEGINNING.

TOGETHER WITH

PARCEL K4

A PORTION OF TRACT “A”, MIAMI INTERNATIONAL MALL PROPERTIES ACCORDING TO THE PLAT THEREOF, AS RECORDED IN PLAT BOOK 117, PAGE 84, OF THE PUBLIC RECORDS OF MIAMI-DADE COUNTY, AND BEING MORE PARTICULARLY DESCRIBED AS FOLLOWS.

COMMENCE AT THE NORTHWEST CORNER OF THE SOUTHWEST 1/4 OF SECTION 32 TOWNSHIP 53 SOUTH, RANGE 40 EAST, AS SHOWN ON SAID PLAT OF MIAMI INTERNATIONAL MALL PROPERTIES; THENCE RUN, N 89° 38' 52" E, ALONG THE NORTH LINE OF SAID SECTION 32, A DISTANCE OF 1055.97 TO THE POINT OF BEGINNING OF THE FOLLOWING DESCRIBED PARCEL OF LAND; THENCE CONTINUE, N 89° 38' 52" E, ALONG THE NORTH LINE OF SAID SECTION 32, A DISTANCE OF 446.03 TO A POINT; THENCE, S 00°21'08”E, A DISTANCE OF 13.20 FEET TO A POINT; THENCE, N 90° 00' 00" W, FOR A DISTANCE OF 272.95 FEET TO A POINT OF CURVATURE OF A CIRCULAR CURVE TO THE LEFT, CONCAVE TO THE SOUTHEAST HAVING A RADIUS OF 375.00 FEET THROUGH A CENTRAL ANGLE OF 44°59'58” FOR AN ARC OF 294.52 FEET TO A POINT OF TANGENCY; THENCE, S45°00'00”W, A DISTANCE OF 388.46 FEET (THE LAST MENTIONED THREE COURSES BEING ALONG THE NORTHEASTERLY BOUNDARY LINE OF PERMANENT ACCESS EASEMENT, AS DESCRIBED IN OFFICIAL RECORD BOOK 11411 AT PAGE 1044 OF THE PUBLIC RECORDS OF MIAMI-DADE COUNTY FLORIDA); THENCE, N45°00'00”W, A DISTANCE OF 20.00 FEET; THENCE, N45°00'00”E, A DISTANCE OF 538.58 FEET TO THE POINT OF BEGINNING (LAST MENTIONED COURSE BEING ALONG THE SOUTHEASTERLY BOUNDARY LINE OF PARCEL VI-E AND ITS SOUTHWESTERLY EXTENSION, AS DESCRIBED IN OFFICIAL RECORD BOOK 11638, AT PAGE 1229 OF THE PUBLIC RECORDS OF MIAMI-DADE COUNTY FLORIDA).

TOGETHER WITH

PARCEL K5

A PORTION OF TRACT “A”, MIAMI INTERNATIONAL MALL PROPERTIES ACCORDING TO THE PLAT THEREOF, AS RECORDED IN PLAT BOOK 117, PAGE 84, OF THE PUBLIC RECORDS OF MIAMI-DADE COUNTY, AND BEING MORE PARTICULARLY DESCRIBED AS FOLLOWS.

COMMENCE AT THE NORTHEAST CORNER OF SAID TRACT “A”, AS SHOWN ON SAID PLAT OF MIAMI INTERNATIONAL MALL PROPERTIES; THENCE RUN, S01°43'13”E, ALONG THE EASTERLY LINE OF SAID TRACT “A”, A DISTANCE OF 761.46 FEET TO THE POINT OF BEGINNING OF THE FOLLOWING DESCRIBED PARCEL OF LAND; THENCE CONTINUE, S01°43'13”E, ALONG THE EASTERLY LINE OF SAID TRACT “A”, A DISTANCE OF 458.78 FEET TO A POINT; THENCE, S88°16'47”W, A DISTANCE OF 10.00 FEET TO A POINT; THENCE, N01°43'13”W, ALONG THE EASTERLY BOUNDARY LINE OF PERMANENT ACCESS EASEMENT, AS DESCRIBED IN OFFICIAL RECORD BOOK 11411 AT PAGE 1044 OF THE PUBLIC RECORDS OF MIAMI-DADE COUNTY FLORIDA, A DISTANCE 458.78 FEET TO A POINT; THENCE, N88°16'47”E, A DISTANCE OF 10.00 FEET TO THE POINT OF BEGINNING.

TOGETHER WITH

A PORTION OF ACCESS EASEMENT (RING ROAD)

A PORTION OF PERMANENT ACCESS EASEMENT, AS SHOWN IN OFFICIAL RECORD BOOK 11411, AT PAGE 1044 OF THE PUBLIC RECORDS OF MIAMI-DADE COUNTY, BOUNDED ON THE WEST BY A LINE PERPENDICULAR TO AND 29.00 FEET NORTHEASTERLY FROM THE MOST WESTERLY CORNER OF SEARS SITE (SAID DISTANCE BEING ALONG THE SOUTHEASTERLY LINE OF PERMANENT ACCESS EASEMENT) AND BOUNDED ON THE EAST BY A PERPENDICULAR LINE TO SAID PERMANENT ACCESS EASEMENT AT THE MOST SOUTHEASTERLY CORNER OF SAID JC PENNY SITE.

SURVEYOR'S CERTIFICATION:

I HEREBY CERTIFY THAT THIS "BOUNDARY SURVEY" OF THE PROPERTY DESCRIBED HEREON IS TRUE AND CORRECT TO THE BEST OF MY KNOWLEDGE AND BELIEF AS RECENTLY SURVEYED AND DRAWN UNDER MY SUPERVISION AND DIRECTION. THIS SURVEY COMPLIES WITH STANDARDS OF PRACTICE REQUIREMENTS ADOPTED BY THE FLORIDA STATE BOARD OF SURVEYORS AND MAPPERS PURSUANT TO CHAPTER 5J-17, FLORIDA ADMINISTRATIVE CODE.

THIS CERTIFICATION DOES NOT EXTEND TO ANY UNNAMED PARTIES.

BY:__________________
JOSE G. HERNANDEZ, PRESIDENT
PROFESSIONAL LAND SURVEYOR No. 6952
STATE OF FLORIDA.

THE ELECTRONIC SEAL AND SIGNATURE APPEARING ON THIS SURVEY WAS AUTHORIZED BY JOSE G. HERNANDEZ, PROFESSIONAL LAND SURVEYOR NO. 6952 OF THE STATE OF FLORIDA ON MARCH 24, 2026.

THIS IS A BOUNDARY SURVEY

PROJECT NUMBER: MD-730

COURSE, FOR A DISTANCE OF 10.00 FEET TO A POINT; THENCE, SOUTH 01° 43' 13” EAST, AT RIGHT ANGLES TO LAST DESCRIBED COURSE, FOR A DISTANCE OF 17.42 FEET TO A POINT; THENCE, SOUTH 88° 16' 47” WEST, AT RIGHT ANGLES TO LAST DESCRIBED COURSE, FOR A DISTANCE OF 35.00 FEET TO THE POINT OF BEGINNING.

SAID PARCEL CONTAINING 1,115,703 SQ.FT (25.612 ACRES) MORE OR LESS.

LYING AND BEING IN SECTION 32, TOWNSHIP 53 SOUTH, RANGE 40 EAST, MIAMI-DADE COUNTY, FLORIDA.