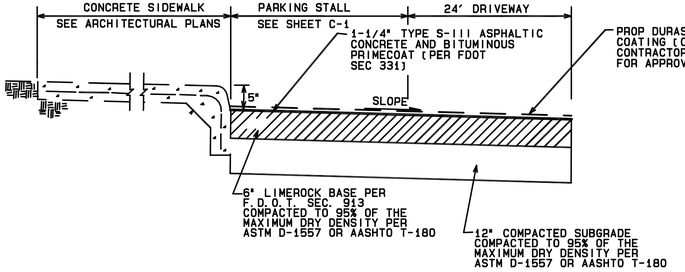

TYPICAL PAVEMENT SECTION

N. T. S.

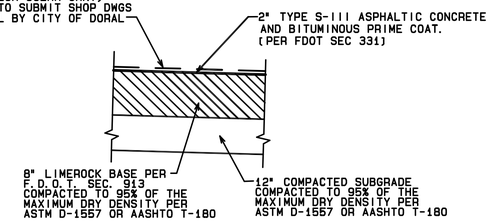

TYPICAL HEAVY DUTY PAVEMENT SECTION

N. T. S.

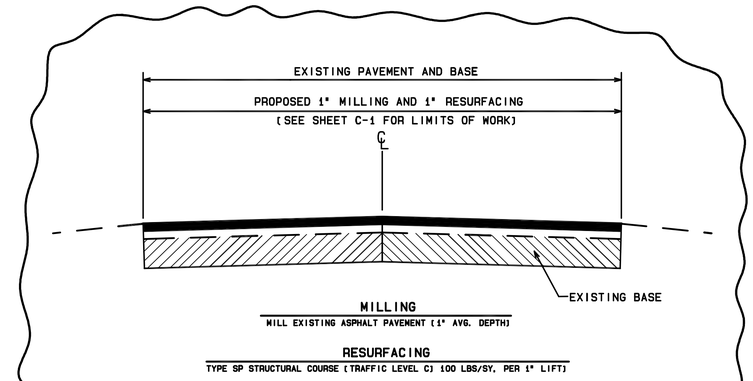

⚠ MILLING AND RESURFACING DETAIL

N. T. S.

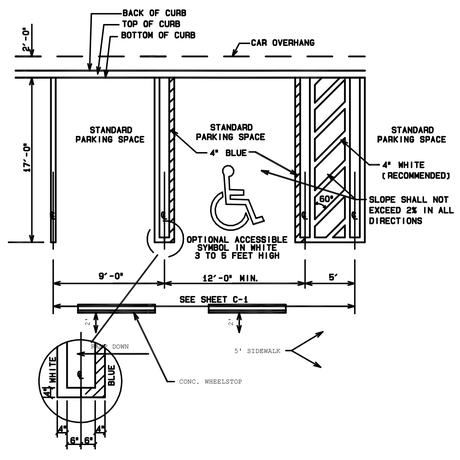

NOTE: ALL PAVEMENT MARKINGS ARE WHITE PAINTED UNLESS OTHERWISE NOTED

TYPICAL STALL MARKINGS

N. T. S.

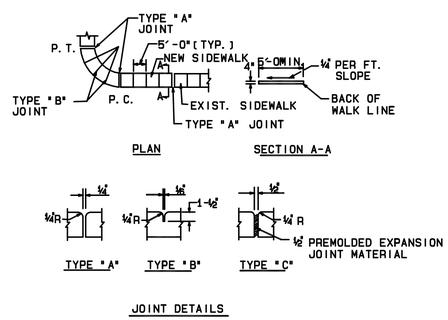

CONCRETE SIDEWALK

N. T. S.

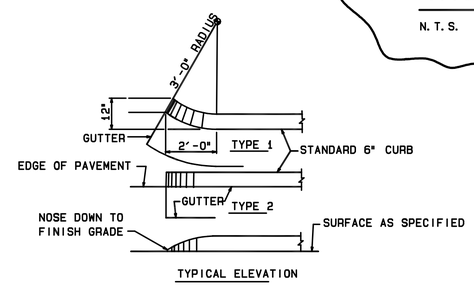

STANDARD CURB NOSING

N. T. S.

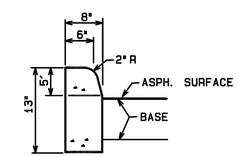

TYPE "D" CURB

N. T. S.

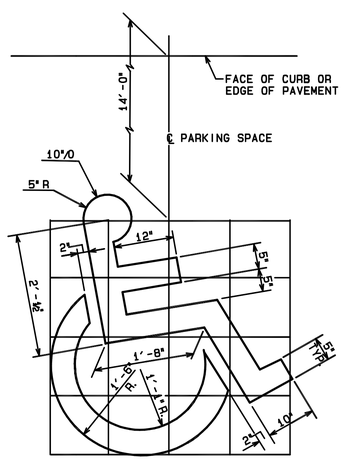

TYPICAL PAVEMENT MARKING FOR HANDICAPPED PARKING SPACE

N. T. S.

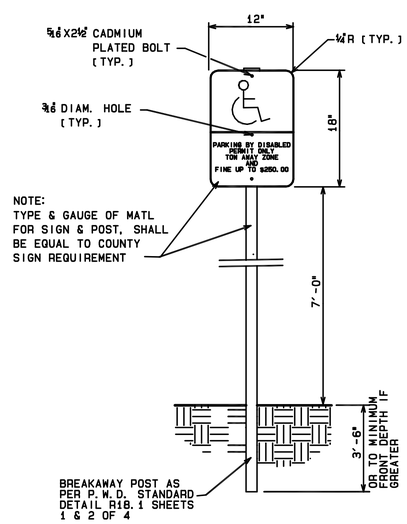

NOTES

1. ALL LETTERS ARE 1" SERIES "C" PER M.U.T.C.D.
2. TOP PORTION OF SIGN SHALL HAVE A HIGHLY REFLECTORIZED BLUE BACKGROUND WITH WHITE REFLECTORIZED LEGEND & BORDER.
3. BOTTOM PORTION OF SIGN SHALL HAVE A HIGHLY REFLECTORIZED WHITE BACKGROUND WITH BLACK OPAQUE LEGEND & BORDER.
4. ONE (1) SIGN REQUIRED FOR EACH PARKING SPACE.
5. HEIGHT OF SIGN SHALL BE IN ACCORDANCE WITH SECTION 24-23 OF THE MANUAL ON UNIFORM TRAFFIC CONTROL DEVICES (M.U.T.C.D.)

HANDICAPPED SIGN DETAIL

N. T. S.

NOTE:
CONTRACTOR SHALL VERIFY ALL THE REQUIRED INFORMATION NECESSARY AT EACH SIGN WITH LOCAL AUTHORITIES PRIOR TO PURCHASING.

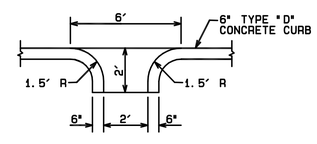

CONC FLUME DETAIL

N. T. S.

Rodolfo Vargas Fournier

Digitally signed by Rodolfo Vargas Fournier
DN: C=US, O=FLAGLER 113 LLC, ID=Quickfish
A01.410200000019451828265C002385 69, CN=Rodolfo Vargas Fournier
Reason: I am the author of this document
Location:
Date: 2025-05.21 11:37:53-04'00'
Foxit PDF Editor Version: 2025.1.0

THIS ITEM HAS BEEN DIGITALLY SIGNED AND SEALED BY RODOLFO J. VARGAS, PE ON THE DATE ADJACENT TO THE SEAL. PRINTED COPIES OF THIS DOCUMENT ARE NOT CONSIDERED SIGNED AND SEALED AND THE SIGNATURE MUST BE VERIFIED ON ANY ELECTRONIC COPIES.

SITE AND PAVING DETAILS

F L A G L E R 1 1 3
L L C
CIVIL ENGINEERING
8550 W. FLAGLER ST., SUITE 113, MIAMI, FLORIDA 33144
TEL. (305)551-6267 FAX (305)551-4542
e-mail: rudy@vsneng.com or leo@vsneng.com

MEDITERRANEA CENTRE II
A FLEX SPACE BUILDING
AT
8335 NW 56TH STREET
DORAL, FLORIDA

no	date	revision/issue
⚠	5/21/25	REVISED PER CITY OF DORAL PUBLIC WORKS

designed	R. VARGAS
drawn	N. SERRATE
checked	L. SERRATE
approved	R. VARGAS
proj no	40047-01
scale	AS SHOWN
date	MAY 30, 2024
cad ref	40047-12

RODOLFO J. VARGAS LICENSE No. 35648 STATE OF FLORIDA PROFESSIONAL ENGINEER

5/21/25
RODOLFO J. VARGAS
PE • 35648

drawing

C-2