RECEIVED
By puglias at 10:40 am, Mar 17, 2025

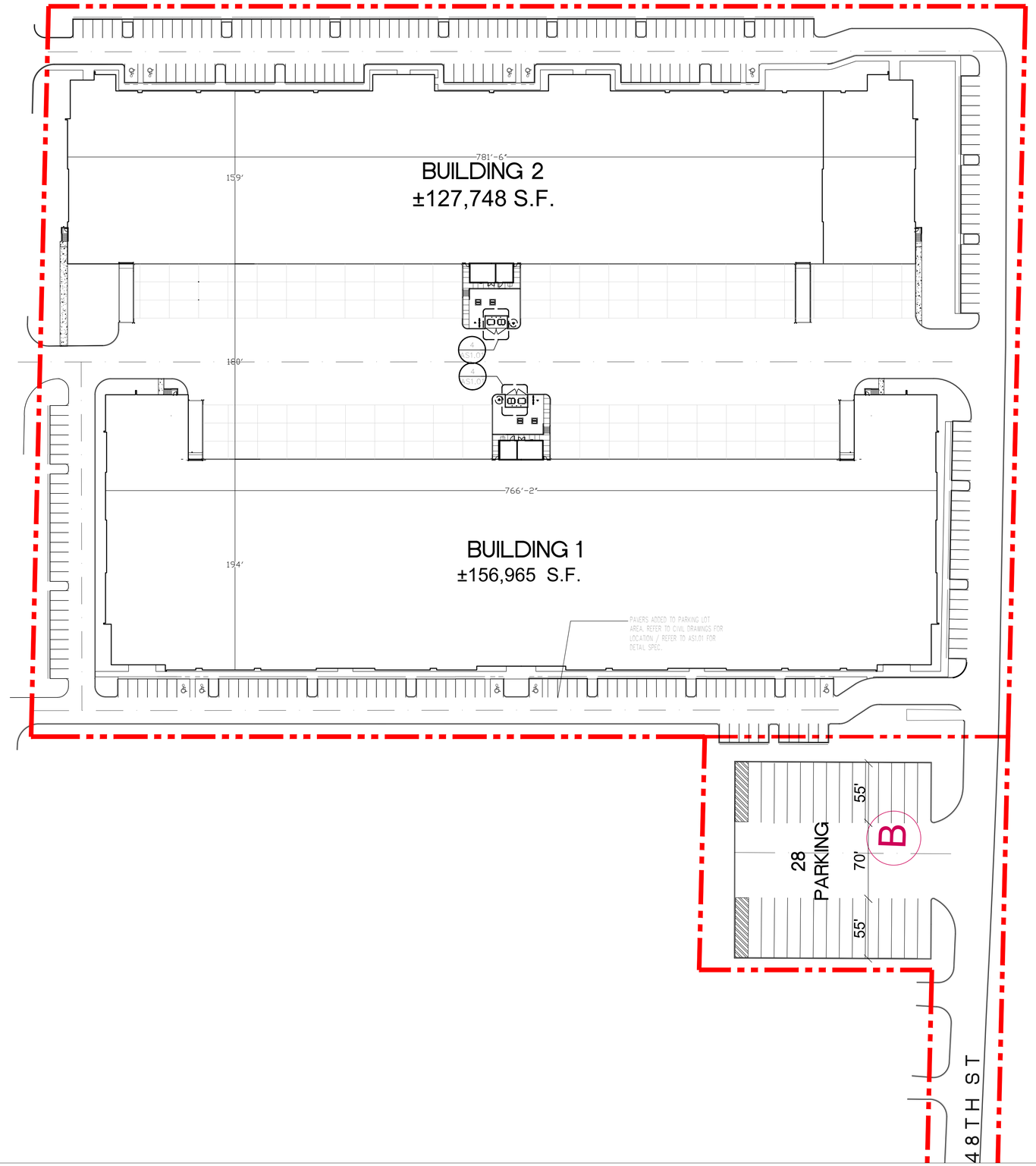

1 SITE PLAN
AS100 SCALE: 1" = 50'-0"

3/2/2025 10:07:12 AM

CLIENT
BRIDGE INDUSTRIAL

COPYRIGHT
This drawing has been prepared solely for the intended use, thus any reproduction or distribution for any purpose other than authorized by Arcadis is forbidden. Written dimensions shall have precedence over scaled dimensions. Contractors shall verify and be responsible for all dimensions and conditions on the job, and Arcadis shall be informed of any variations from the dimensions and conditions shown on the drawing. Shop drawings shall be submitted to Arcadis for general conformance before proceeding with fabrication.

Arcadis Professional Services (USA) Inc.

ISSUES

No.	DESCRIPTION	DATE
	ISSUE FOR SPA SUBMITTAL	11/15/2024

CONSULTANTS

SEAL

PRIME CONSULTANT

ARCADIS
7000 N Federal Hwy - 2nd Floor
Boca Raton FL 33487 USA
tel 248 936 8000
www.arcadis.com

PROJECT
DORAL 826 - BUILDING WAREHOUSES
7705-7789 NW 48th Street,
Doral Florida 33166

PROJECT NO:
147536

DRAWN BY:	CHECKED BY:
Author	**Checker**
PROJECT MGR:	APPROVED BY:
Designer	**Approver**

SHEET TITLE
ARCHITECTURAL SITE PLAN

SHEET NUMBER
AS100

ISSUE

SCALE CHECK 10mm 1 in

Autodesk Docs://AUS-00147771-Bridge Point Doral 826/BP Doral 826 SPA V22.rvt

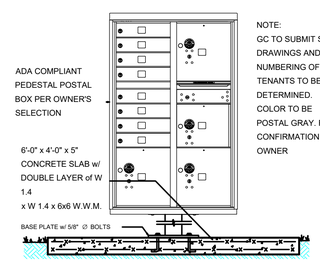

5 MAILBOX

AS101 SCALE: 1/2" = 1'-0"

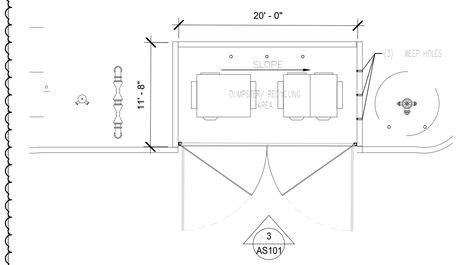

4 ENLARGED DUMPSTER PLAN

AS101 SCALE: 1/8" = 1'-0"

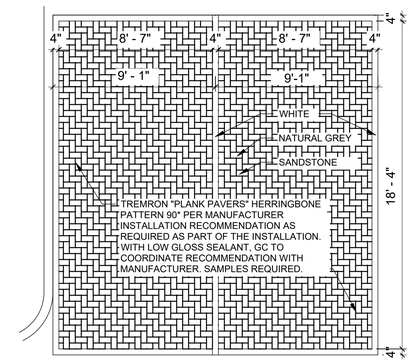

6 PAVER DESIGN DETAIL

AS101 SCALE: 1/4" = 1'-0"

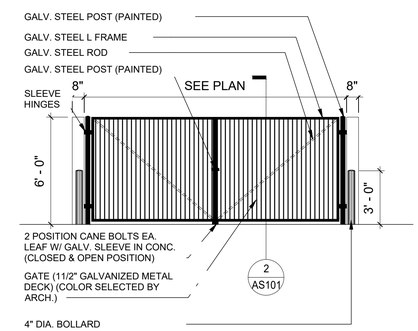

3 DUMPSTER ELEVATION

AS101 SCALE: 1/4" = 1'-0"

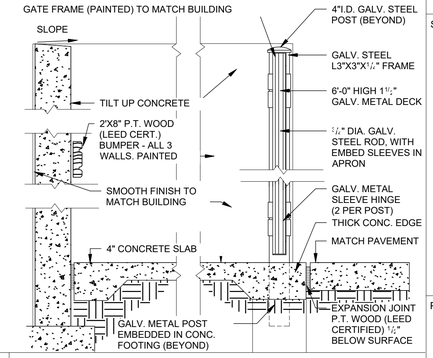

2 DUMPSTER SECTION

AS101 SCALE: 3/4" = 1'-0"

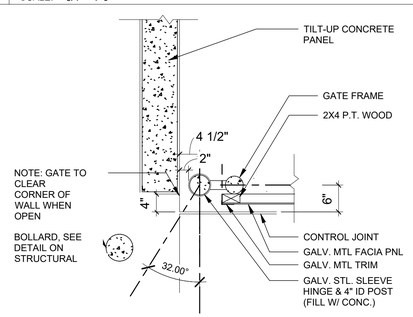

1 DUMPSTER POST DETAIL

AS101 SCALE: 3/4" = 1'-0"

-TRANSFORMER LOCATION TO BE DETERMINED DURING BUILDING PERMIT SUBMITTAL.

-LOCATION OF BACKFLOW TO BE DETERMINED DURING BUILDING PERMIT SUBMITTAL.

CLIENT

BRIDGE INDUSTRIAL

COPYRIGHT
This drawing has been prepared solely for the intended use, thus any reproduction or distribution for any purpose other than authorized by Arcadis is forbidden. Written dimensions shall have precedence over scaled dimensions. Contractors shall verify and be responsible for all dimensions and conditions on the job, and Arcadis shall be informed of any variations from the dimensions and conditions shown on the drawing. Shop drawings shall be submitted to Arcadis for general conformance before proceeding with fabrication.

Arcadis Professional Services (USA) Inc.

ISSUES

No.	DESCRIPTION	DATE
	ISSUE FOR SPA SUBMITTAL	11/15/2024
1	SPA COMMENT RESPONSES	01/20/2025

CONSULTANTS

SEAL

PRIME CONSULTANT

ARCADIS

7000 N Federal Hwy - 2nd Floor
Boca Raton FL 33487 USA
tel 248 936 8000
www.arcadis.com

PROJECT

DORAL 826 - BUILDING WAREHOUSES
7705-7789 NW 48th Street,
Doral Florida 33166

PROJECT NO: 147536

DRAWN BY:	CHECKED BY:
Author	**Checker**
PROJECT MGR:	APPROVED BY:
Designer	**Approver**

SHEET TITLE

ARCHITECTURAL SITE DETAILS

SHEET NUMBER AS101

ISSUE 1

SCALE CHECK: 1 in 10mm

Autodesk Docs://AUS-0014771-Bridge Point Doral 826/BP Doral 826 SPA V22.rvt

3/2/2025 10:07:15 AM

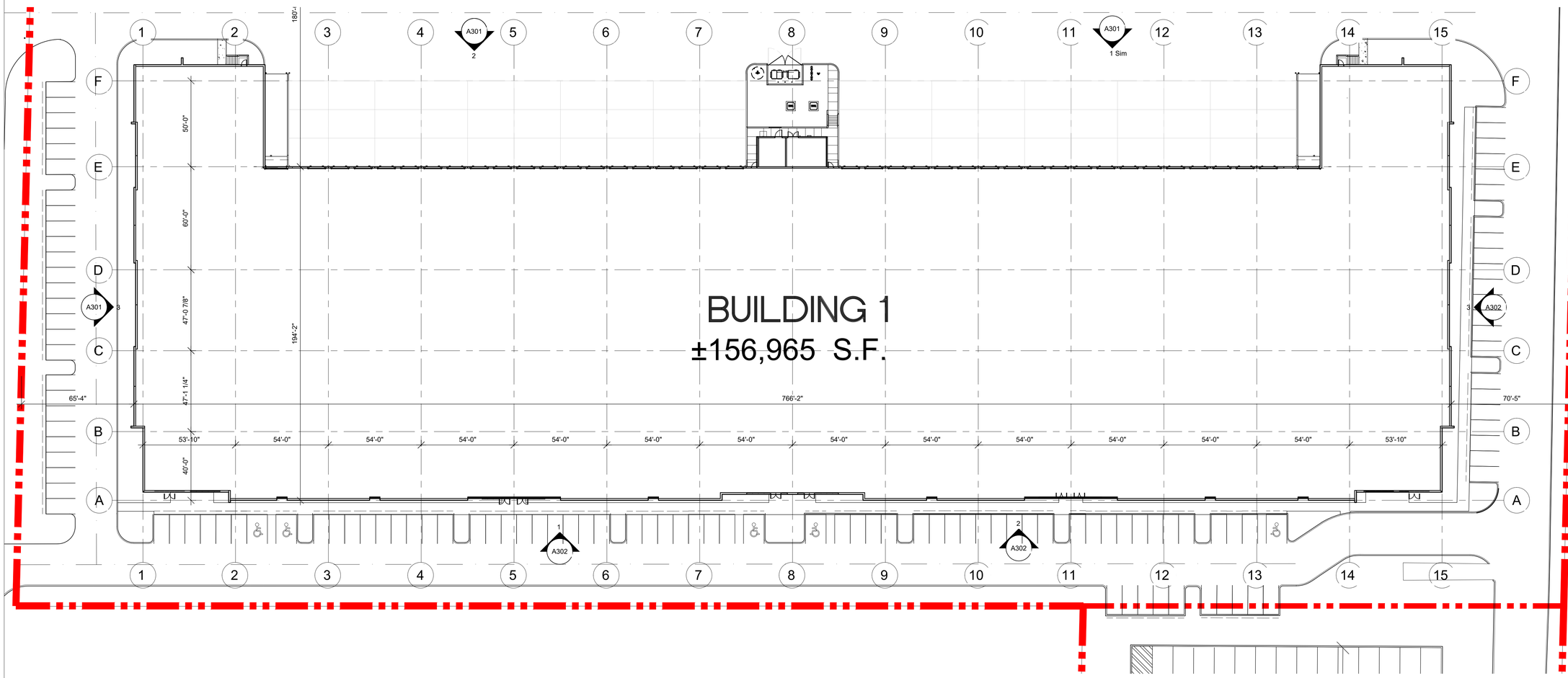

1 BUILDING 1 OVERALL FLOOR PLAN

A101 SCALE: 1" = 30'-0"

3/2/2025 10:06:14 AM

CLIENT
BRIDGE INDUSTRIAL

COPYRIGHT
This drawing has been prepared solely for the intended use, thus any reproduction or distribution for any purpose other than authorized by Arcadis is forbidden. Written dimensions shall have precedence over scaled dimensions. Contractors shall verify and be responsible for all dimensions and conditions on the job, and Arcadis shall be informed of any variations from the dimensions and conditions shown on the drawing. Shop drawings shall be submitted to Arcadis for general conformance before proceeding with fabrication.

Arcadis Professional Services (USA) Inc.

ISSUES

No.	DESCRIPTION	DATE
	ISSUE FOR SPA SUBMITTAL	11/15/2024

CONSULTANTS

SEAL

PRIME CONSULTANT

ARCADIS

7000 N Federal Hwy - 2nd Floor
Boca Raton FL 33487 USA
tel 248 936 8000
www.arcadis.com

PROJECT
DORAL 826 - BUILDING WAREHOUSES
7705-7789 NW 48th Street,
Doral Florida 33166

PROJECT NO:
147536

DRAWN BY:	CHECKED BY:
Author	**Checker**
PROJECT MGR:	APPROVED BY:
Designer	**Approver**

SHEET TITLE
BUILDING 1 OVERALL FLOOR PLAN

SHEET NUMBER
A101

ISSUE

Autodesk Docs://AUS-00147771-Bridge Point Doral 826/BP Doral 826 SPA V22.rvt

SCALE CHECK 10mm 1 in

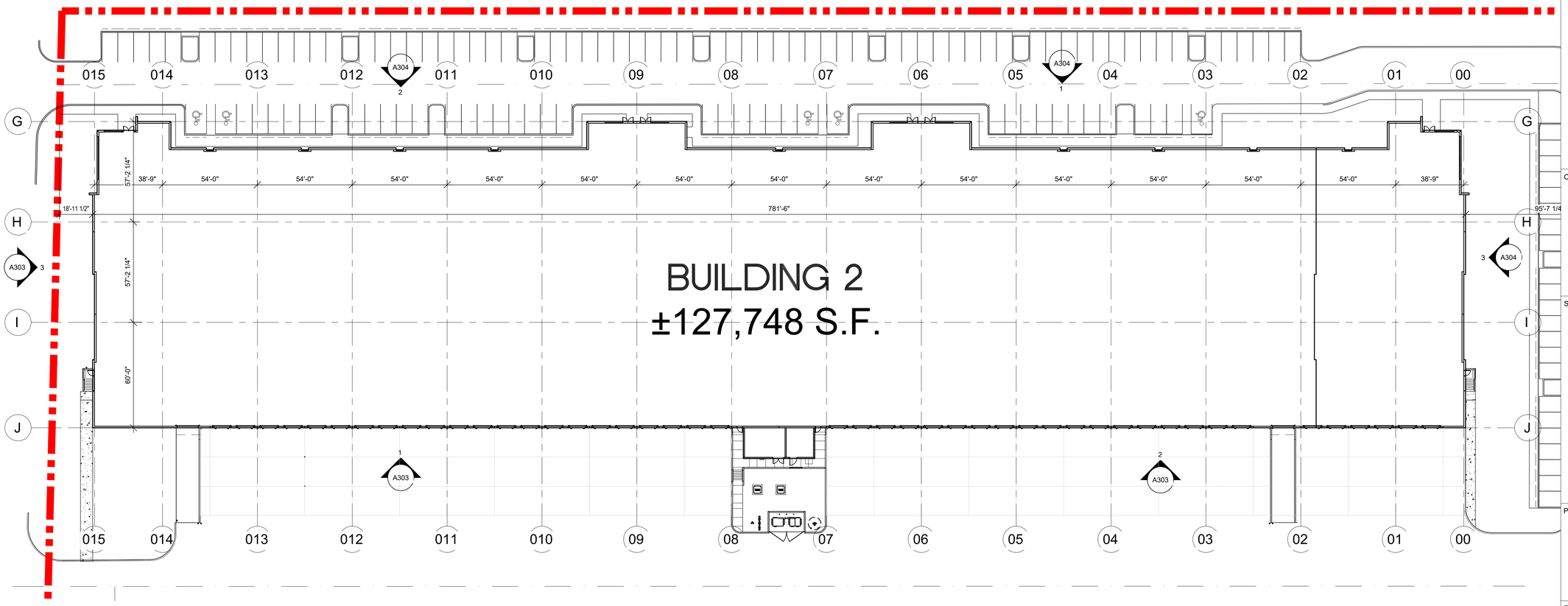

CLIENT
BRIDGE INDUSTRIAL

COPYRIGHT
This drawing has been prepared solely for the intended use, thus any reproduction or distribution for any purpose other than authorized by Arcadis is forbidden. Written dimensions shall have precedence over scaled dimensions. Contractors shall verify and be responsible for all dimensions and conditions on the job, and Arcadis shall be informed of any variations from the dimensions and conditions shown on the drawing. Shop drawings shall be submitted to Arcadis for general conformance before proceeding with fabrication.

Arcadis Professional Services (USA) Inc.

ISSUES

No.	DESCRIPTION	DATE
	ISSUE FOR SPA SUBMITTAL	11/15/2024

CONSULTANTS

SEAL

PRIME CONSULTANT

ARCADIS
7000 N Federal Hwy - 2nd Floor
Boca Raton FL 33487 USA
tel 248 936 8000
www.arcadis.com

PROJECT
DORAL 826 - BUILDING WAREHOUSES
7705-7789 NW 48th Street,
Doral Florida 33166

PROJECT NO:
147536

DRAWN BY:	CHECKED BY:
Author	**Checker**
PROJECT MGR:	APPROVED BY:
Designer	**Approver**

SHEET TITLE
BUILDING 2 OVERALL FLOOR PLAN

SHEET NUMBER
A102

ISSUE

SCALE CHECK
10mm
1 in

Autodesk Docs://AUS-00147771-Bridge Point Doral 826/BP Doral 826 SPA V22.rvt

3/2/2025 10:06:16 AM

1 BUILDING 2 OVERALL FLOOR PLAN
A102 SCALE: 1" = 30'-0"