RECEIVED
By Massiel at 10:15 am, May 26, 2026

LEGEND

- CENTER LINE
- RIGHT-OF-WAY
- PROPERTY LINE
- x 11.2 — EXISTING GRADE ELEVATION (NGVD '29)
- 6.79 — PROP. GRADE ELEVATION (NGVD '29)
- PROP. DRAINAGE STRUCTURE

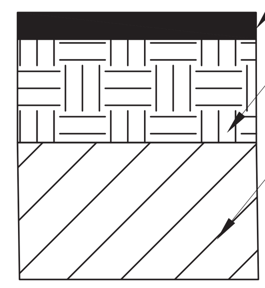

PAVEMENT CROSS-SECTION
N.T.S.

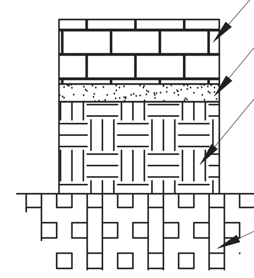

BRICK PAVER CROSS-SECTION
N.T.S.

DRAINAGE CALCULATION:

EXISTING CONDITIONS:
SITE AREA = 101,607 SF
PERVIOUS AREA = 26,352 SF (25.9%)
IMPERVIOUS AREA = 75,255 SF (74.1%)

PROPOSED SITE DISTRIBUTION:
SITE AREA = 101,607 SF
PERVIOUS AREA = 15,182 SF (14.9%)
IMPERVIOUS AREA = 86,425 SF (85.1%)

REQUIRED STORAGE:
RAINFALL AMOUNT (P) = 3.2 INCHES (5–yr/1–hr)
COMPACTED SOIL STORAGE = 8.18" (SFWMD)

EXISTING CONDITIONS:
S=(PERVIOUS/SITE)*(COMPACTED SOIL STORAGE)=
=(26,352/101,607)*(8.18)= 2.12"
S(EXIST.) = 2.12"
RUNOFF(R)= (P–0.2S)^2/(P+0.8S) = 1.57"
VOLUME OF RUNOFF(V)= A*R/12
= 101,607*1.57/12 = 13,294 CF

PROPOSED CONDITIONS:
S=(PERVIOUS/SITE)*(COMPACTED SOIL STORAGE)=
=(15,182/101,607)*(8.18)= 1.22"
S(PROP.) = 1.22"
RUNOFF(R)= (P–0.2S)^2/(P+0.8S) = 2.09"
VOLUME OF RUNOFF(V)= A*R/12
= 101,607*2.09/12
= 17,697 CF

17,697 CF – 13,394 CF = 4,403 CF
1.0 IN. X 101,607 SF / 12IN/FT = 8,467 CF
SITE AREA FOR WQ: 101,607 SF – 47,550 SF(ROOF)= 54,057 SF
IMPERVIOUS AREA WQ: 54,057 SF – 15,182 = 38,875 SF
2.5 IN. X 71.9% (PERCENT IMPERVIOUS) = 1.8 IN.
1.8 IN. X 101,607 SF (SITE AREA)/ 12IN/FT = 15,241 CF

17,697 CF = 0.4063 AC–FT = 4.8756 AC–IN = VWQ

$$L1 = \frac{FS*\%WQ*Vwq}{K(H2*W + 2*Heff*Du - Du^2 + 2*Heff*Ds) + 0.000139*W*Du}$$

$$L2 = \frac{FS*\%WQ*Vwq}{K(2*HeffDu - Du^2 + 2*Heff*Ds) + 0.000139*W*Du}$$

K = 0.00203, PER EXFILTRATION TEST DATED 12/12/2025

FS = 2 H2 = 3.65'
%WQ = 0.5 Du = 2.15'
Heff = 1.83' Ds = 1.85'
W = 4.00' TRENCH HEIGHT = 4'

L1 = 95.3' → 96' F.D. REQUIRED Du > Ds
L2 = 226.4' → 227.0'
141' F.D. PROVIDED

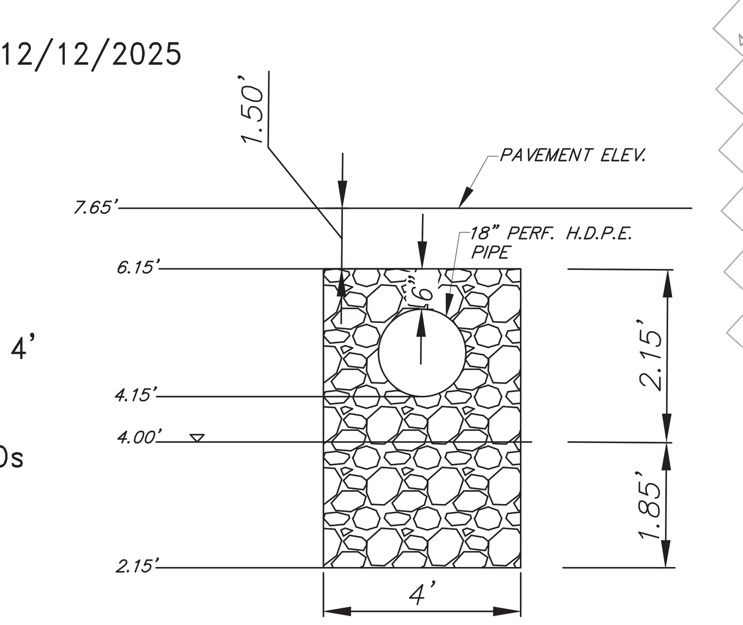

TYP. EXFILTRATION TRENCH SECTION
N.T.S.

NOTES

1. CONCRETE SHALL HAVE MINIMUM STRENGTH 3,000 PSI.
2. RAINFALL RUNOFF SHALL BE RETAINED ON-SITE.
3. MAXIMUM SIDE SLOPE 4:1 (HORIZONTAL TO VERTICAL)
4. NO OBSTRUCTIONS SHALL BE PRESENT WITHIN VISIBILITY TRIANGLES
5. ELEVATIONS HEREON RELATE ON N.G.V.D., 1929.

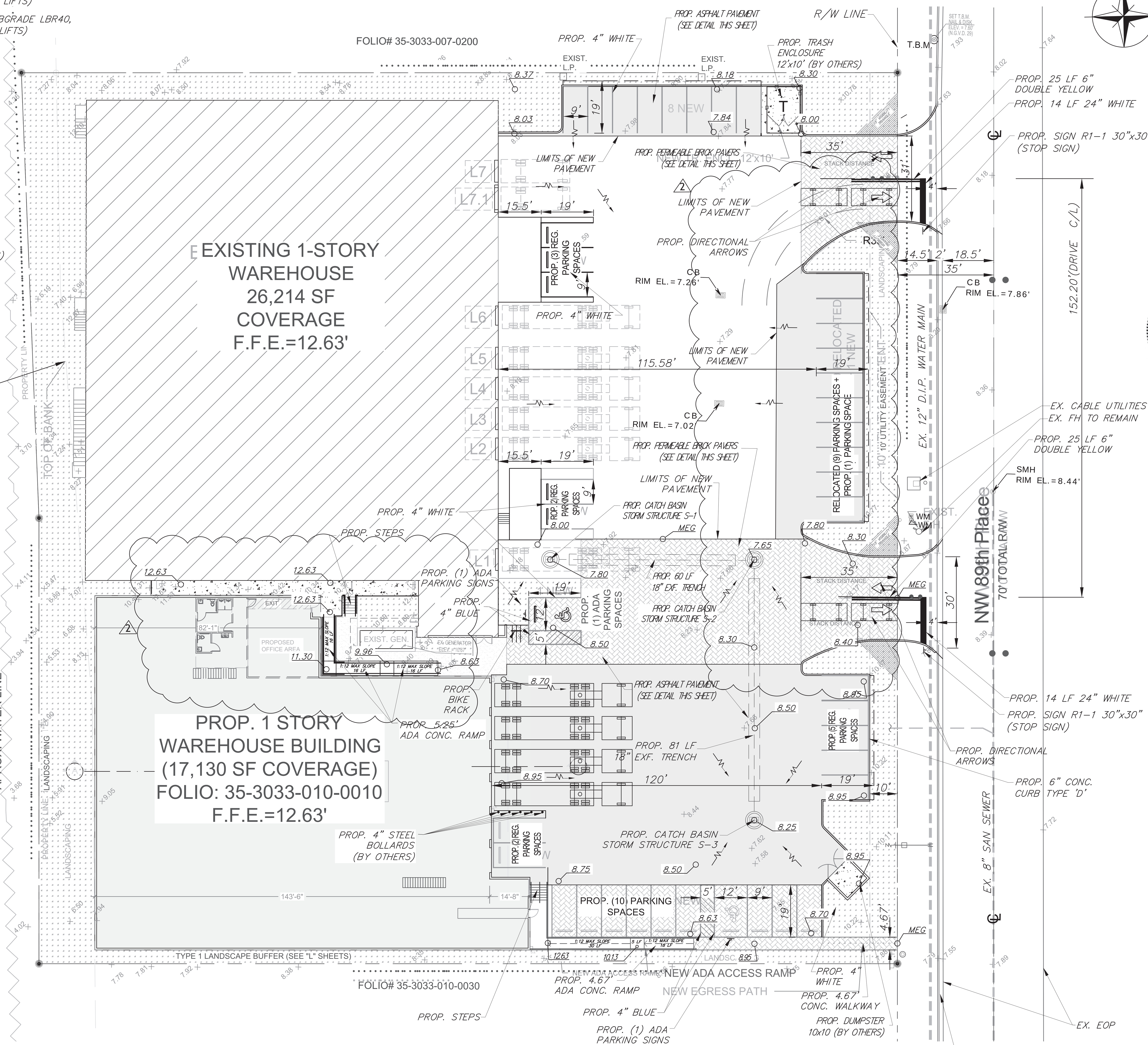

PAVING, GRADING, & DRAINAGE - PLAN VIEW
SCALE: 1" = 20'–0"

STRUCTURE NO.	STRUCTURE DIAMETER	RIM EL.	INVERT EL.	BOTTOM EL.	FRAME & GRATE
S–1	4'	7.80'	4.15' (E)	2.15'	4105 & 6224
S–2	4'	7.65'	4.15' (S) 4.15' (W)	2.15'	4105 & 6224
S–3	4'	8.25'	4.15' (N)	2.15'	4105 & 6224

Sunshine 811
Call 811 or visit sunshine811.com two full business days before digging to have buried facilities located and marked.
Check positive response codes before you dig!

EA3 CIVIL ENGINEERING
EA3 CIVIL ENGINEERING, INC.
9050 PINES BLVD., STE. 415-415
PEMBROKE PINES, FLORIDA 33024
OFFICE: 754.777.7993
WWW.EA3CIVIL.COM
CA NO. 32522
PE NO. 82291
ERIC ARENCIBIA, P.E.

SEAL:
ERIC ARENCIBIA LICENSE No 82291 STATE OF FLORIDA PROFESSIONAL ENGINEER
Digitally signed by Eric Arencibia
DN: CN=Eric Arencibia, dnQualifier=A01410D00000192448D04E50001EBCD, O=Unaffiliated, C=US
Reason: This item has been digitally signed & sealed by Eric Arencibia, P.E. on the date adjacent to the seal. Printed copies of this document are not considered signed & sealed and the signature must be verified on any electronic copies.
Date: 2026.05.15 14:14:50-04'00'

ERIC ARENCIBIA, P.E.
NO. 82291, STATE OF FLORIDA

PROJECT NAME & ADDRESS: DORAL WAREHOUSE, 2020 NW 89TH PLACE, DORAL, FL 33141

PROPOSED NEW FACILITY:
DORAL WAREHOUSE

THIS DRAWING CONTAINS PROPRIETARY INFORMATION AND IS THE PROPERTY OF "MEC DESIGN CONSULTANTS, INC." AND MAY NOT BE REPRODUCED OR DISTRIBUTED WITHOUT THE WRITTEN PERMISSION OF "MEC DESIGN CONSULTANTS, INC."

REVISION NO.	DATE	BY
1	12-16-25	REVIEW COMMENTS
2	04-30-26	REVIEW COMMENTS

CHECKED BY: E.A.
DRAWN BY: A.L.
DATE: 10/02/2025

SHEET TITLE:
PAVING, GRADING, & DRAINAGE PLAN

SHEET:
C-400