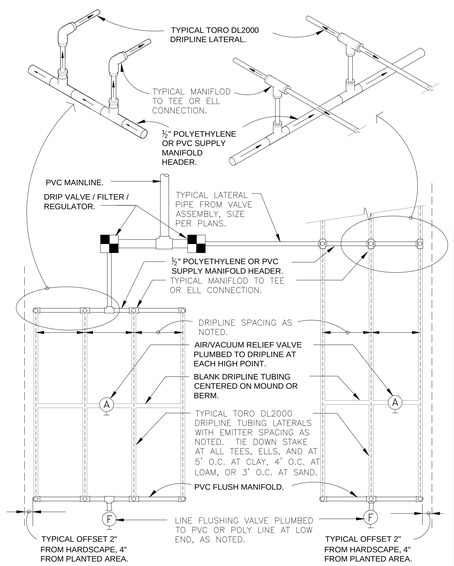

END FEED EXAMPLE

CENTER FEED EXAMPLE

MAXIMUM RECOMMENDED LENGTH OF RUN AT 0% SLOPE						
DRIPLINE TYPE	FLOW RATE	EMITTER SPACING	15 PSI	25 PSI	30 PSI	40 PSI
RPG212	0.53 GPH	12"	250'	360'	400'	460'
RPG218	0.53 GPH	18"	350'	515'	565'	650'
RPG412	1.0 GPH	12"	160'	240'	260'	300'
RPG418	1.0 GPH	18"	240'	340'	375'	430'

FLOW RATE PER 100 LINEAR FEET @ 20 PSI				
DRIPLINE TYPE	FLOW RATE	EMITTER SPACING	ACTUAL FLOW / 100 FT. GPH	GPM
RPG212	0.53 GPH	12"	53.00	0.88
RPG218	0.53 GPH	18"	35.33	0.59
RPG412	1.0 GPH	12"	102.00	1.70
RPG418	1.0 GPH	18"	67.99	1.13

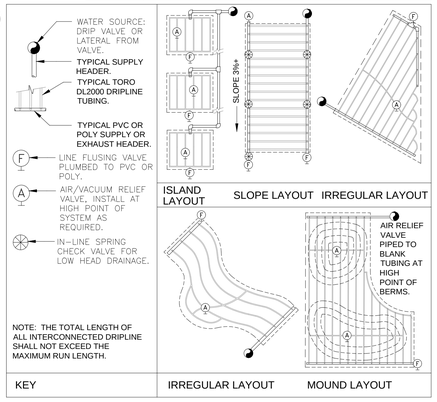

NOTE: THE TOTAL LENGTH OF ALL INTERCONNECTED DRIPLINE SHALL NOT EXCEED THE MAXIMUM RUN LENGTH.

KEY | IRREGULAR LAYOUT | MOUND LAYOUT

1 TORO DL2000 DRIPLINE
3" = 1'-0" 328413.56-49

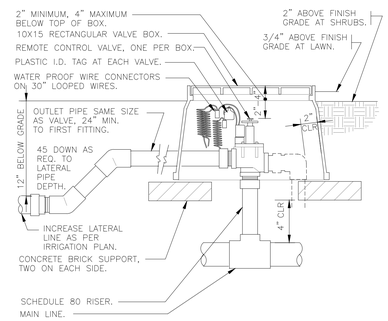

2 ELECTRIC REMOTE CONTROL VALVE
1 1/2" = 1'-0" 328406.13-02

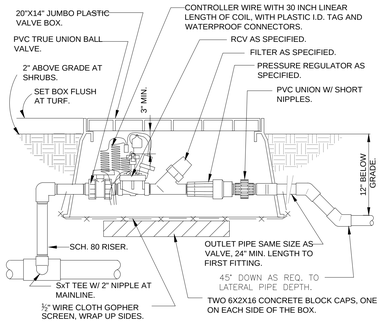

3 1" DRIP VALVE/FILTER/REGULATOR
1 1/2" = 1'-0" 328413.76-23

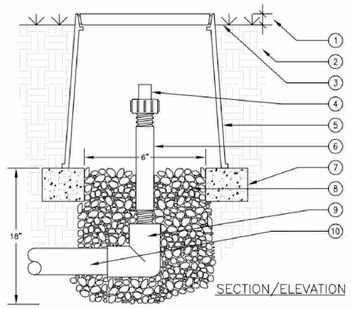

1. 1" ABOVE FINISH GRADE.
2. NATIVE SOIL PER SPECIFICATIONS.
3. FINISH GRADE.
4. TORO FLUSH VALVE (T-FCH-H-FIPT).
5. 6" ROUND PLASTIC VALVE BOX, HEAT BRAND "AR" ON LID IN 1" HIGH CHARACTERS.
6. 3/4" SCH 80 PVC NIPPLE (LENGTH AS REQUIRED).
7. BRICK SUPPORTS (2 COMMON BRICKS REQUIRED).
8. PEA GRAVEL SUMP (6" DEEP).
9. PVC ELBOW (5xT) WITH 3/4" THREADED OUTLET.
10. PVC PIPING.

USE ONE FLUSH VALVE FOR EVERY 7 GPM PER ZONE. LOCATE AT LOW POINTS. FLUSH RATE IS 0.8 GPM. FLUSH PRESSURE IS 2 PSI.

4 AUTOMATIC FLUSH VALVE
N.T.S.

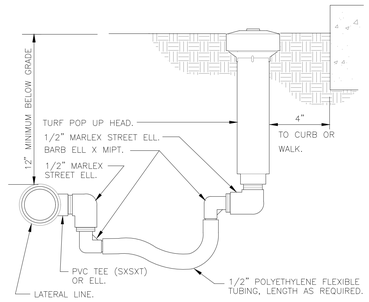

5 TURF SPRAY FLEX ASSEMBLY
3" = 1'-0" 328403.13-02

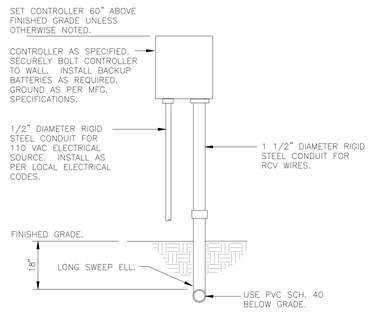

6 WALL MOUNT CONTROLLER
1" = 1'-0" 328409.13-01

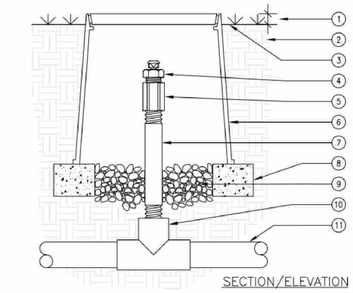

1. 1" ABOVE FINISH GRADE.
2. NATIVE SOIL PER SPECIFICATIONS.
3. FINISH GRADE.
4. TORO AIR/VACUUM RELIEF VALVE (T-VD-500-34).
5. 1/2" PVC COUPLING (TxT).
6. 6" ROUND PLASTIC VALVE BOX, HEAT BRAND "AR" ON LID IN 1" HIGH CHARACTERS.
7. 1/2" SCH 80 PVC NIPPLE (LENGTH AS REQUIRED).
8. BRICK SUPPORTS (2 COMMON BRICKS REQUIRED).
9. PEA GRAVEL SUMP (6" DEEP).
10. PVC TEE (5xSxT) WITH 1/2" THREADED OUTLET.
11. PVC PIPING.

USE ONE AIR/RELIEF VALVE FOR EVERY 7 GPM PER ZONE. LOCATE AT HIGH POINTS.

7 1/2" AIR/VACUUM RELIEF VALVE
N.T.S.

LEGEND

1. TORO WIRELESS RAIN SENSOR MODEL NO. TWRFS REFER TO PLAN FOR SENSOR LOCATION
2. ADJUSTABLE MOUNTING BRACKET
3. WOOD SCREW
4. WOOD FENCE
5. ANTENNA

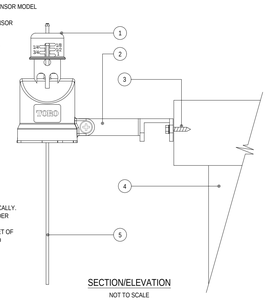

NOTES:
1. INSTALLATION TO BE COMPLETED IN ACCORDANCE WITH MANUFACTURERS SPECIFICATIONS.
2. DO NOT SCALE DRAWINGS.
3. CONTRACTORS NOTE: FOR PRODUCT AND COMPANY INFORMATION VISIT www.CADetails.com/info REFERENCE NUMBER 005-255b.

8 TORO - TWRS WIRELESS RAIN SENSOR
N.T.S. DETAIL-FILE

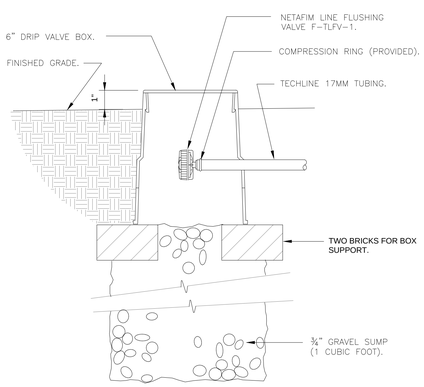

9 NETAFIM TECHLINE FLUSH VALVE
3" = 1'-0" 328413.49-33

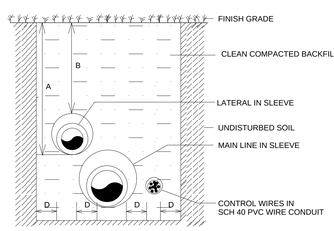

PIPE SIZE	DIMENSIONS A	B	C
1 1/2" AND 2"	24"	18"	4"
3" AND 4"	30"	24"	4"
6" AND LARGER	36"	30"	4"

NOTE
SLEEVES SHALL BE TWICE THE DIAMETER OF THE LATERAL OR WIRE BUNDLE CARRIED

TRENCHING DETAIL (NTS)
VEHICHLAR TRAFFIC AREAS

10 TRENCHING DETAILS / VEHICULAR TRAFFIC AREAS
NTS 10

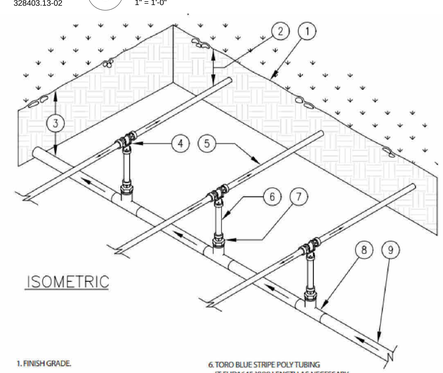

1. FINISH GRADE.
2. DEPTH OF TUBING PER SPECIFICATIONS.
3. DEPTH OF PVC SUPPLY MANIFOLD PER SPECIFICATIONS.
4. TORO LOC-EZE TEE (T-FTT16).
5. DRIPLINE LATERAL.
6. TORO BLUE STRIPE POLY TUBING (T-EHD1645-X000 LENGTH AS NECESSARY.
7. TORO LOC-EZE X 1/2" MTP ADAPTER (T-FAM16).
8. PVC TEE (5xSxS).
9. PVC SUPPLY MANIFOLD FROM DRIP ZONE KIT.

11 CENTER-FEED SUPPLY-MANIFOLD
N.T.S. DETAIL-FILE

ALL LANDSCAPE DATA INC
Landscape (Architecture + Plant Information)
(305) 303 7059 / 4459 NW 97 CT.
Doral, FL 33178
www.alllandscapedata.net
www.alllandscapedata.com

DERICK LANGEL
Landscape Architect LA666705
ISA Certified Arborist FL-6439A

REVISIONS:

PROJET NAME:
2020 NW 89th Place
DORAL , FL 33172

SHEET INFORMATION:

Drawing Size	30x42
Project #:	2024-09-99
Drawn By:	VD
Checked By:	DL-JV

Title:
IRRIGATION DETAILS

Sheet Number:
IR-02

Date: - September 23, 2025