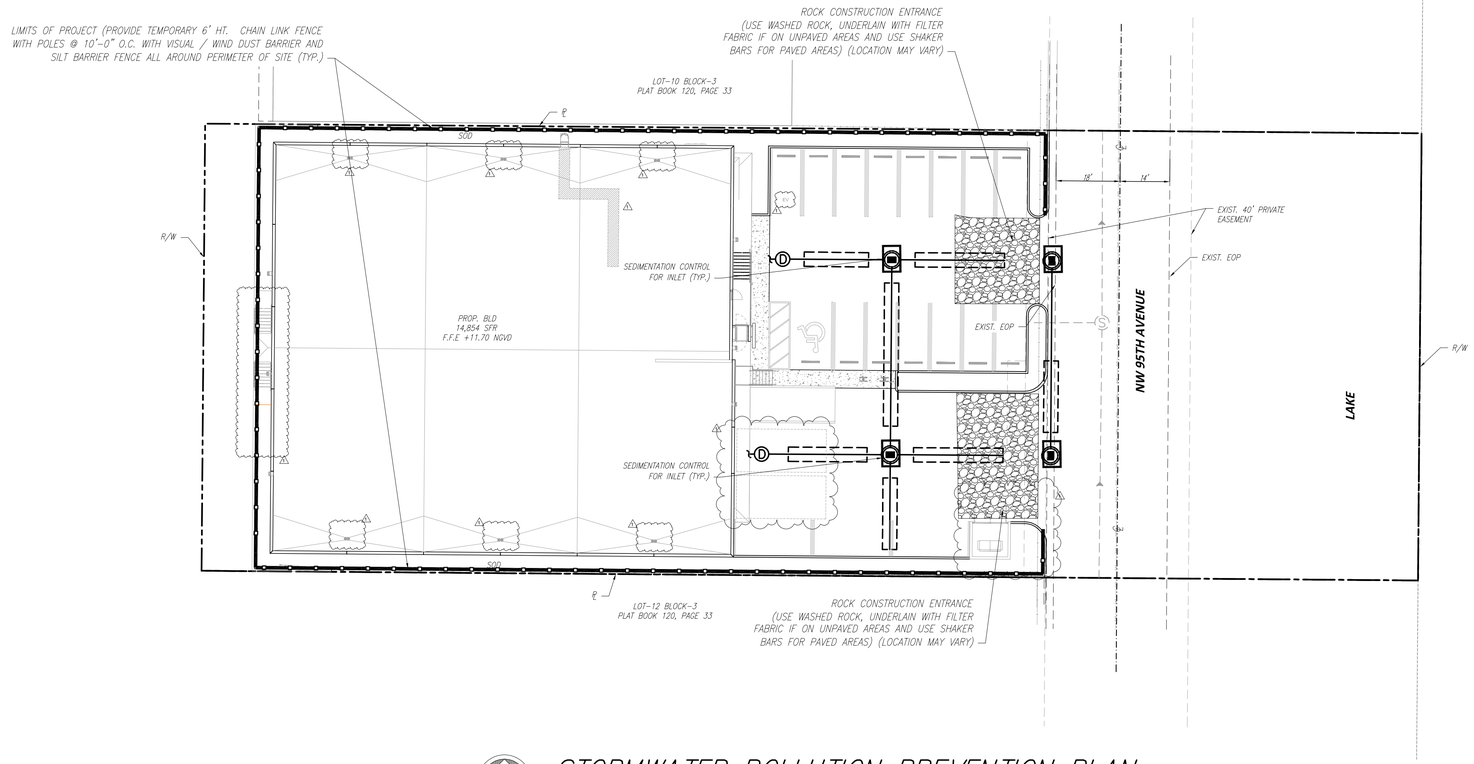

NORTH

STORMWATER POLLUTION PREVENTION PLAN

SCALE: 1" = 20'

TURBIDITY AND EROSION CONTROL DETAILS N.T.S.

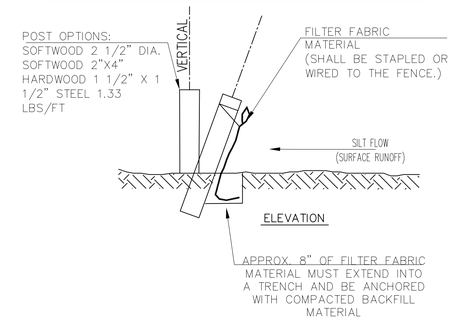

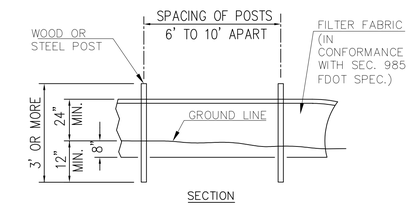

TEMPORARY SILT FENCE

TO INTERCEPT AND DETAIN SMALL AMOUNTS OF SEDIMENT FROM DISTURBED AREAS DURING CONSTRUCTION OPERATIONS.

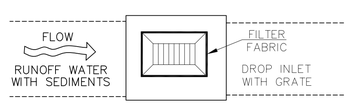

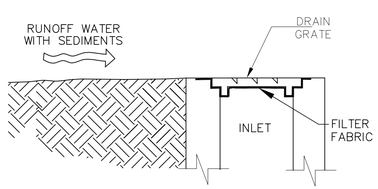

SYNTHETIC BALE PROTECTION AROUND INLET

BUILDING AREAS

BUILDING AREA:

GROUND FLOOR OFFICE	1,721 S.F
GROUND FLOOR WAREHOUSE	13,133 S.F
MEZZANINE STORAGE	1,485 S.F
TOTAL	16,339 S.F

Sunshine811

Call 811 or visit sunshine811.com two full business days before digging to have buried facilities located and marked.

Check positive response codes before you dig!

ENGINEER'S CERTIFICATION:

I HEREBY CERTIFY: That this plan was prepared under my direction and to the best of my knowledge and belief complies with the intent of the "MANUAL OF UNIFORM STANDARDS FOR DESIGN, CONSTRUCTION AND MAINTENANCE FOR STREETS, AND HIGHWAYS", as adopted by the State of Florida Legislature, Chapter 72-328 F.S.

5/20/25

ANDRE D. MARTINEZ
LICENSE
No. 85425
STATE OF FLORIDA
PROFESSIONAL ENGINEER

THIS ITEM HAS BEEN DIGITALLY SIGNED AND SEALED BY ANDRE D. MARTINEZ, PE., ON THE DATE ADJACENT TO THE SEAL.

PRINTED COPIES OF THIS DOCUMENT ARE NOT CONSIDERED SIGNED AND SEALED AND THE SIGNATURE MUST BE VERIFIED ON ANY ELECTRONIC COPIES.

Digitally signed by Andre Martinez
Date: 2025.05.20 17:15:37-04'00'

CONSULTANT

HADONNE

ENGINEERING AND PLANNING · LAND SURVEYOR AND MAPPERS
3D LASER SCANNING · UTILITY COORDINATION
SUBSURFACE UTILITY ENGINEERING

1065 NW 89th Court, Suite 101 · Doral, Fl 33172
P: +1(305)266-1188 · F: +1(305)207-6645 · W: www.hadonne.com

3 ARCHITECTURAL GROUP
8103 NW 33RD ST.
DORAL, FL 33122
T: 305.592.1.994 T: 888.276.4095
AA26002069

copyright 2024 V3 Architectural Group, Inc.:

All rights reserved. These drawings and specifications are instruments of service and shall remain the property of V3 Architectural Group, Inc. whether the product for which they were prepared is executed or not. They are not to be used in any manner on other projects or extensions to the project except by agreement in writing and with appropriate compensation to V3 Architectural Group, Inc.. Reproductions of specifications without the written consent of V3 Architectural Group, Inc. is prohibited.

FINGER LAKE WAREHOUSE

2100 NW 95 AVE DORAL, FL 33172

DATE:	07.02.24
DRAWN BY:	DS
DESIGNED BY:	JH
PROJECT NO.	24-0012

No.	DESCRIPTION	Date
1	Revision 1	02.24.25

STORMWATER POLLUTION PREVENTION PLAN

C5.0

CONSTRUCTION DOCUMENTS