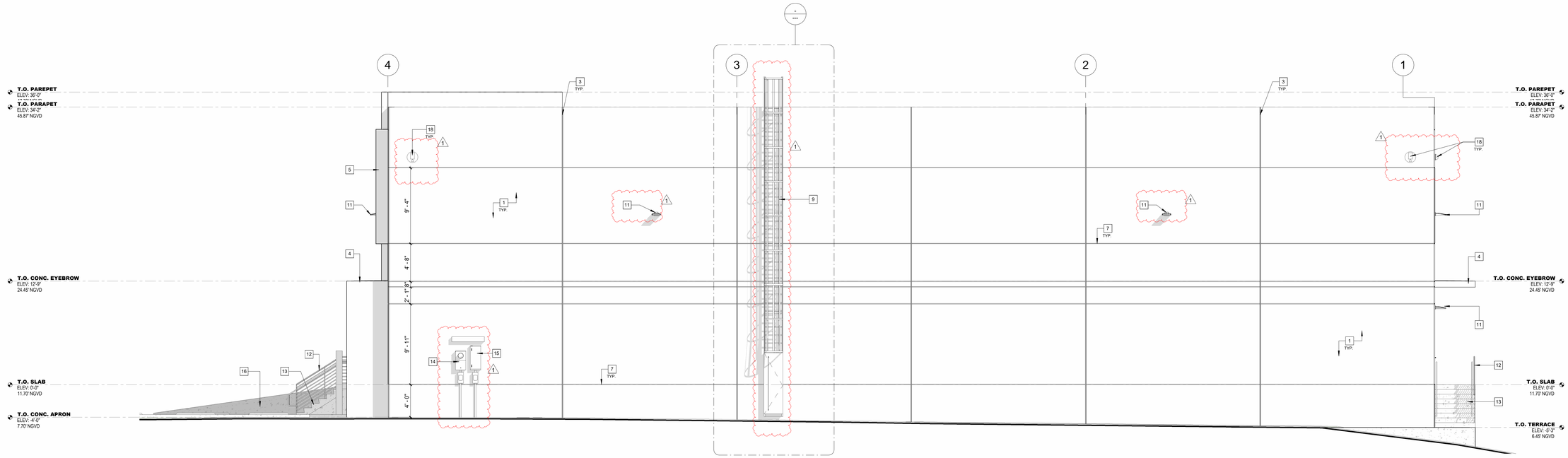

1 NORTH ELEVATION

SCALE: 3/16" = 1'-0"

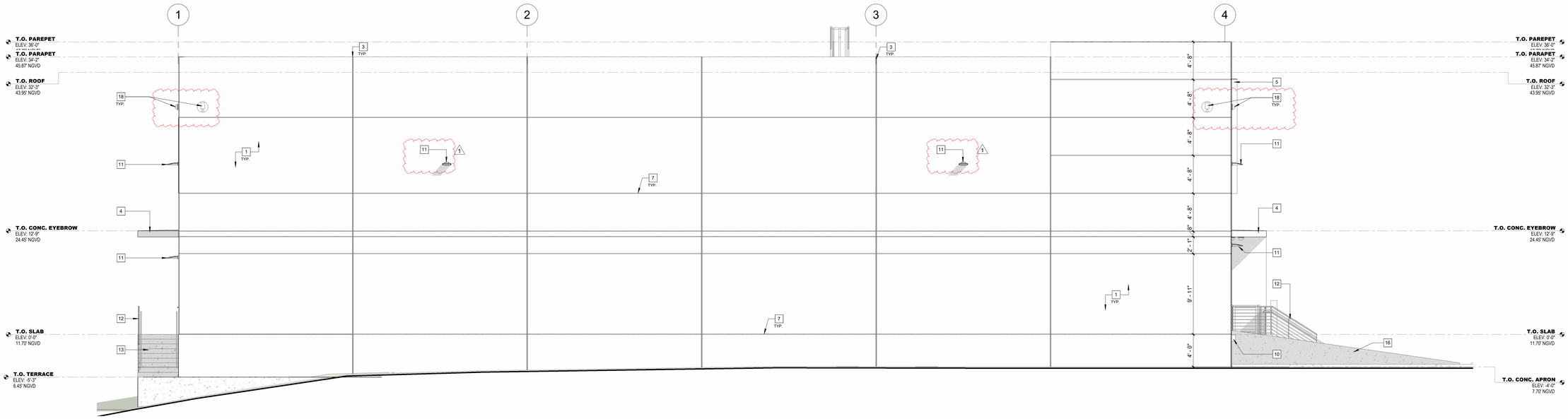

2 SOUTH ELEVATION

SCALE: 3/16" = 1'-0"

ELEVATION KEY NOTES

1. TILT-UP PANEL TEX-COTE FINISH
2. IMPACT RATED STOREFRONT SYSTEM. REFER TO WINDOW AND DOOR SCHEDULE
3. PANEL JOINT. REFER TO FLOOR PLAN (TYP.)
4. CONCRETE EYEBROW. REFER TO SECTIONS
5. CONCRETE BAND AROUND WINDOW
6. IMPACT RATED OVERHEAD DOOR. REFER TO DOOR SCHEDULE
7. 1" RECESS IN TILT-UP PANEL (TYP) REFER TO SECTIONS.
8. IMPACT RATED DOOR. REFER TO DOOR SCHEDULE
9. LADDER. SEE ROOF PLAN AND DETAILS.
10. RUBBER DOCK BUMPER. TYPICAL AT ALL OVERHEAD DOORS
11. EXTERIOR WALL MOUNT LIGHT FIXTURE REFER TO ELECTRICAL DRAWINGS
12. 42" METAL GUARDRAIL REFER TO DETAILS
13. EXTERIOR CONCRETE STAIR REFER TO DETAIL AND STRUCTURAL DRAWINGS
14. ELECTRICAL METER. REFER TO ELECTRICAL DRAWINGS
15. ELECTRICAL PANEL. REFER TO ELECTRICAL DRAWINGS
16. RAMP. REFER TO SECTIONS.
17. LOUVERS. REFER TO MEP DRAWINGS.
18. SECURITY CAMERA

V3 ARCHITECTURAL GROUP
8103 NW 33RD STREET
DORAL, FL 33122
T: 305.599.1496 F: 1.888.276.4095
AA26000268

copyright 2024 V3 Architectural Group, Inc.

All rights reserved. These drawings and specifications are instruments of service and shall remain the property of V3 Architectural Group, Inc. whether the product for which they were prepared is executed or not. They are not to be used in any manner on other projects or extensions to the project except by agreement in writing and with appropriate compensation to V3 Architectural Group, Inc.. Reproductions of specifications without the written consent of V3 Architectural Group, Inc. is prohibited.

FINGER LAKE WAREHOUSE

2100 NW 95 AVE DORAL, FL 33172

DATE:	07.02.24
DRAWN BY:	R.L.
DESIGNED BY:	J.A.VIDAL
REVIEWED BY:	M.D.FNDZ
PROJECT NO.	24-0012

REVISIONS

No.	DESCRIPTION	Date
1	SITE PLAN REV 1	05.19.25

JOSE A. VIDAL AR94535
MANUEL D.FERNANDEZ

manuel d fernandez

Digitally signed by manuel d fernandez
DN: c=US, o=V3 Architectural Group, 2.5.4.97=Qualifier=A01410D0000019595B5105100198A82, cn=manuel d fernandez
Date: 2025.05.21 13:37:25 -04'00'

ELEVATIONS

A5.1

SITE PLAN SUBMITTAL