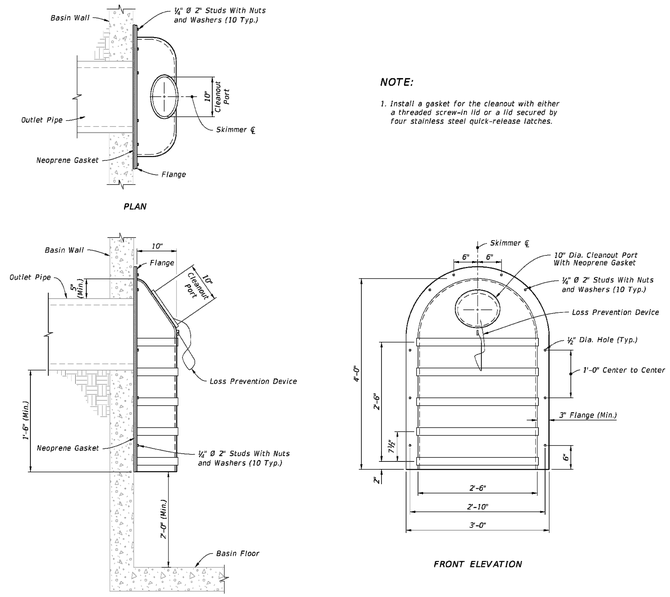

NOTE:

1. Install a gasket for the cleanout with either a threaded screw-in lid or a lid secured by four stainless steel quick-release latches.

TYPE II DETAILS

TYPE II SKIMMERS

LAST REVISION	DESCRIPTION:				
11/01/19	REVISION	FDOT FY 2020-21 STANDARD PLANS	SKIMMERS FOR FRENCH DRAIN OUTLETS	INDEX 443-002	SHEET 3 of 3

11/16/2019 9:51:08 AM

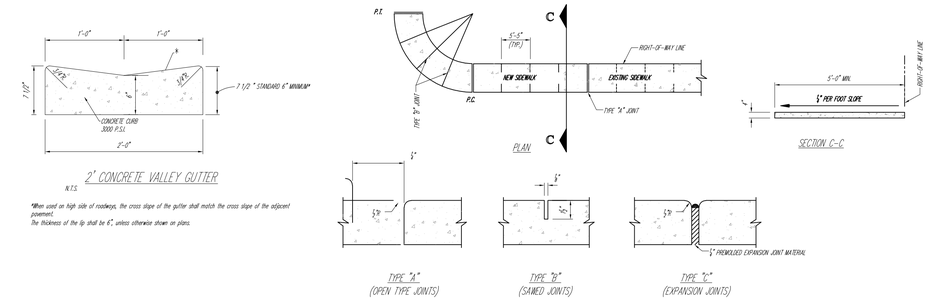

*When used on high side of roadways, the cross slope of the gutter shall match the cross slope of the adjacent pavement.
The thickness of the lip shall be 6", unless otherwise shown on plans.

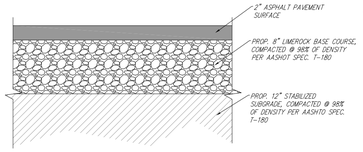

TYPICAL ASPHALT PAVEMENT DETAIL

N.T.S.

JOINTS

TABLE OF SIDEWALK JOINTS	
TYPE	LOCATIONS
"A"	AND P.T. OF CURVES, JUNCTION OF EXISTING AND NEW SIDEWALKS
"B"	5'-0" CENTER TO CENTER ON SIDEWALKS
"C"	*WHERE SIDEWALK ABUTS CONCRETE CURBS, DRIVEWAYS, AND SIMILAR STRUCTURES

TABLE OF SIDEWALK THICKNESS - "T"	
LOCATIONS	"T"
NON-VEHICULAR AREAS	4"
DRIVEWAYS	6"

NOTES:

1. ALL WORK SHALL COMPLY WITH CITY OF MIAMI STANDARD SPECIFICATIONS, MATERIALS: SEC. 302-1 & METHODS: SEC. 408, AND FDOT STANDARDS.
2. SUBGRADE COMPACTED TO 95% DENSITY AASHTO T-99.
3. SIDEWALKS TO BE CONSTRUCTED WITH NATURAL UNCOLORED PORTLAND CEMENT CONCRETE TYPE I OR TYPE IINON STRUCTURAL (2500 PSI)

SIDEWALK CONSTRUCTION DETAIL

N.T.S.

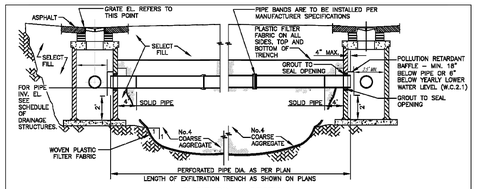

LONGITUDINAL SECTION

NOTE

1-AFTER THE COARSE AGGREGATE HAS BEEN PLACED TO THE PROPER ELEVATION IT SHALL BE CAREFULLY WASHED DOWN WITH CLEAN WATER, OR TAMPERED, TO ALLOW FOR INITIAL SETTLEMENT THAT MAY OCCUR. IF SETTLEMENT DOES TAKE PLACE, ADDITIONAL No.4 COARSE AGGREGATE SHALL BE ADDED TO RESTORE THE PROPER ELEVATION SO THAT THE EXFILTRATION TRENCH IS COMPLETED IN ACCORDANCE WITH THE DETAILS.

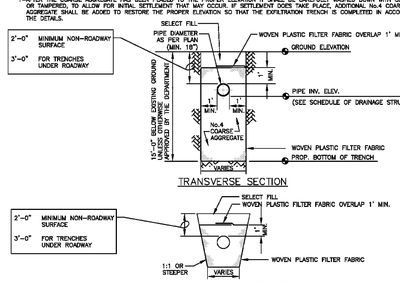

TRANSVERSE SECTION

ALT. TRANS. SECTION*

* MAY BE USED IN AREAS WHERE TRENCH WALLS WILL NOT STAND VERTICAL, OR WHERE CAVE-IN BELOW THE WATER TABLE IS LIKELY TO OCCUR. TO BE USED AT THE ENGINEER'S DISCRETION.

NOTES (CONTINUED ON NEXT PAGE)

1. PLASTIC FILTER FABRIC SHALL BE WOVEN MONOFILAMENT POLYPROPYLENE GEOTEXTILE. PERMITTIVITY SHALL BE GREATER THAN 0.50 SEC AND FLOW RATE GREATER OR EQUAL TO 50 gpd/sfft.
2. MAXIMUM EXFILTRATION RATE WHICH CAN BE USED IN CALCULATING FRENCH DRAIN LENGTH IS 0.1 cfs/ft.

MIAMI-DADE COUNTY DEPARTMENT OF TRANSPORTATION AND PUBLIC WORKS	APPROVED 04/18/2015	REVISED 02/08/2011 09/26/2012 10/19/2012	STANDARD STORM DRAINAGE DETAIL EXFILTRATION TRENCH (FRENCH DRAIN)	SD 1.1 SHEET 1 OF 2

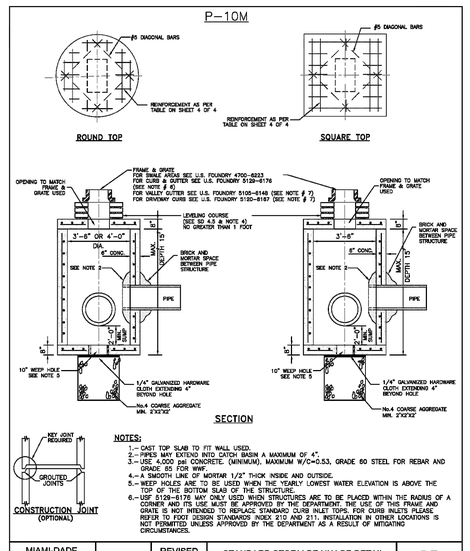

NOTES:

1.- CAST TOP SLAB TO FIT WALL USED.
2.- PIPES MAY EXTEND INTO CATCH BASIN A MAXIMUM OF 4".
3.- USE 4,000 psi CONCRETE. (MINIMUM), MAXIMUM W/C=0.53, GRADE 60 STEEL FOR REBAR AND GRADE 65 FOR WWF.
4.- A SMOOTH LINE OF MORTAR 1/2" THICK INSIDE AND OUTSIDE.
5.- WEEP HOLES ARE TO BE USED WHEN THE YEARLY LOWEST WATER ELEVATION IS ABOVE THE TOP OF THE BOTTOM SLAB OF THE STRUCTURE.
6.- USF 5129-6176 MAY ONLY USED WHEN STRUCTURES ARE TO BE PLACED WITHIN THE RADIUS OF A CORNER AND ITS USE MUST BE APPROVED BY THE DEPARTMENT. THE USE OF THIS FRAME AND GRATE IS NOT INTENDED TO REPLACE STANDARD CURB INLET TOPS. FOR CURB INLETS PLEASE REFER TO FDOT DESIGN STANDARDS INDEX 210 AND 211. INSTALLATION IN OTHER LOCATIONS IS NOT PERMITTED UNLESS APPROVED BY THE DEPARTMENT AS A RESULT OF MITIGATING CIRCUMSTANCES.

MIAMI-DADE COUNTY DEPARTMENT OF TRANSPORTATION AND PUBLIC WORKS	APPROVED 5/8/2015	REVISED 5/8/2015	STANDARD STORM DRAINAGE DETAIL MANHOLE AND INLET (TYPE P)	SD 2.7 SHEET 2 OF 4

Sunshine811

Call 811 or visit sunshine811.com two full business days before digging to have buried facilities located and marked.

Check positive response codes before you dig!

ENGINEER'S CERTIFICATION:

I HEREBY CERTIFY: That this plan was prepared under my direction and to the best of my knowledge and belief complies with the intent of the "MANUAL OF UNIFORM STANDARDS FOR DESIGN, CONSTRUCTION AND MAINTENANCE FOR STREETS, AND HIGHWAYS", as adopted by the State of Florida Legislature, Chapter 72-328 F.S.

5/20/25

ANDRE D. MARTINEZ LICENSE No. 85425 STATE OF FLORIDA PROFESSIONAL ENGINEER

THIS ITEM HAS BEEN DIGITALLY SIGNED AND SEALED BY ANDRE D. MARTINEZ, PE., ON THE DATE ADJACENT TO THE SEAL.

PRINTED COPIES OF THIS DOCUMENT ARE NOT CONSIDERED SIGNED AND SEALED AND THE SIGNATURE MUST BE VERIFIED ON ANY ELECTRONIC COPIES.

CONSULTANT

Digitally signed by Andre Martinez
Date: 2025.05.20 17:15:36 -04'00'

HADONNE

ENGINEERING AND PLANNING - LAND SURVEYOR AND MAPPERS
3D LASER SCANNING - UTILITY COORDINATION
SUBSURFACE UTILITY ENGINEERING

1065 NW 89th Court, Suite 101 - Doral, Fl 33172
P: +1(305)266-1188 - F: +1(305)207-6840 - W: www.hadonne.com

3 ARCHITECTURAL GROUP
8103 NW 33RD ST.
DORAL, FL 33122
T: 305.592.1.994 T. 888.276.4095
AA26002069

copyright 2024 V3 Architectural Group, Inc.;

All rights reserved. These drawings and specifications are instruments of service and shall remain the property of V3 Architectural Group, Inc. whether the project for which they were prepared is executed or not. They are not to be used in any manner on other projects or extensions to the project except by agreement in writing and with appropriate compensation to V3 Architectural Group, Inc.. Reproductions of specifications without the written consent of V3 Architectural Group, Inc. is prohibited.

FINGER LAKE WAREHOUSE

2100 NW 95 AVE DORAL, FL 33172

DATE:	07.02.24
DRAWN BY:	DS
DESIGNED BY:	JH
PROJECT NO.	24-0012

No.	DESCRIPTION	Date

PAVING AND DRAINAGE DETAILS

C3.0

CONSTRUCTION DOCUMENTS